The City of Edgewater

STANDARD CONSTRUCTION DETAILS

CITY OF EDGEWATER

STANDARD CONSTRUCTION DETAILS

CITY OF EDGEWATER
DEPARTMENT OF ENVIRONMENTAL SERVICES
409 MANGO TREE DRIVE
EDGEWATER, FLORIDA 32132
TELEPHONE (386) 424-2476
FAX (386) 424-2480

INDEX

ROADWAY DETAILS

R–1	50' OR 60' R/W ROAD SECTION
R–2	60' R/W WITH DITCH ROAD SECTION
R–3A & 3B	80' R/W WITH MEDIAN AND DITCH ROAD SECTION
R–4A & 4B	100' R/W WITH 5 LANE ROAD SECTION
R–5	100' R/W WITH 4 LANE AND MEDIAN ROAD SECTION
R–6	ROADWAY GEOMETRY
R–7	STANDARD CUL–DE–SAC DETAIL WITH SINGLE STORM INLET
R–8	STANDARD CUL–DE–SAC DETAIL WITH DUAL STORM INLET
R–8A	Y – TURN
R–9	STANDARD CURB CONSTRUCTION
R–10	ROADWAY INTERSECTION VALLEY GUTTER
R–11	PAVEMENT BUTT JOINT
R–12	ROADWAY AND PARKING AREA DESIGN AND CONSTRUCTION NOTES
R–13	ROADWAY AND PARKING AREA DESIGN AND CONSTRUCTION NOTES
R–14	ROADWAY AND PARKING AREA DESIGN AND CONSTRUCTION NOTES
R–15	ROADWAY AND PARKING AREA DESIGN AND CONSTRUCTION NOTES
R–16	ROADWAY AND PARKING AREA DESIGN AND CONSTRUCTION NOTES
R–17	ROADWAY AND PARKING AREA DESIGN AND CONSTRUCTION NOTES
R–18	TECHNICAL SPECIFICATIONS FOR SITE PLANS AND SUBDIV. TESTING
R–19	CONCRETE PAVEMENT DETAILS
R–20	SUBDIVISION TECHNICAL SPECIFICATIONS; SODDING, SEEDING AND MULCHING
R–21A & 21B	ROADWAY AND MISCELLANEOUS LANDSCAPING DESIGN AND CONSTRUCTION NOTES
R–22	SILT FENCE TURBIDITY BARRIER
R–23	TREE PROTECTION BARRICADE
R–24	FLOATING TURBIDITY BARRIER
R–25	CONTRACTOR REQUIREMENTS FOR SITE CLEARING, GRADING, AND EROSION CONTROL DESIGN AND CONSTRUCTION NOTES
R–26	CONTRACTOR REQUIREMENTS FOR SITE CLEARING, GRADING, AND EROSION CONTROL DESIGN AND CONSTRUCTION NOTES

City of EDGEWATER Inc. 1951

STANDARD CONSTRUCTION DETAIL
INDEX
ROADWAY DETAILS

FILE NAME:
RODINDX.DWG

DETAIL REF:
INDEX

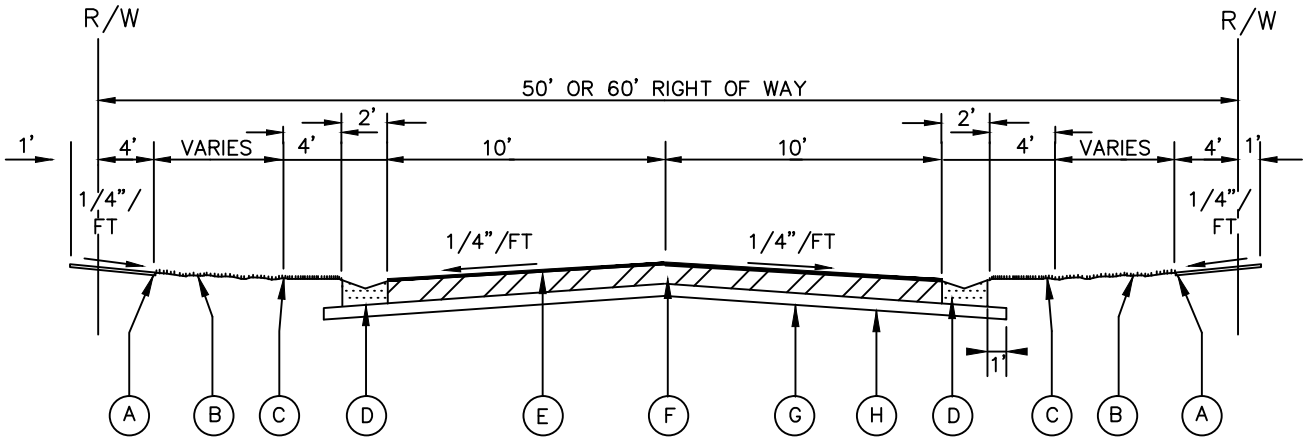

(A) 4'–0" WIDE CONCRETE SIDEWALK
4" THICK, 3000 P.S.I.
6" THICK AT DRIVEWAY
3" MINIMUM ABOVE TOP OF CURB

(B) SOD or SEED AND MULCH PER F.D.O.T. STANDARD SPECIFICATION SECTION 570 OR 575, AS APPLICABLE.

(C) 4' WIDE AREA WITH MAXIMUM SLOPE OF 1" PER 4 FT.

(D) CONCRETE MIAMI CURB, 3000 P.S.I. (SEE DETAIL R–9)

(E) ASPHALT PAVEMENT:
1–1/4" ASPHALT BITUMINOUS CONCRETE TYPE S–III; MINIMUM MARSHALL FIELD STABILITY 1500, COMPACTED TO 98% DENSITY PER FM 1–T238 (METHOD B), NUCLEAR DENSITY TEST, "BACK SCATTER METHOD".

(F) BASE:
6" SOIL CEMENT BASE FOR RESIDENTIAL MINIMUM BEARING STRENGTH OF 350 P.S.I. SHALL BE OBTAINED WITHIN 7 DAYS COMPACTED TO 98% DENSITY BASED ON AASHTO T–99 STANDARD PROCTOR TEST; CONSTRUCTION METHODS SHALL CONFORM TO SECTION 270 OF STANDARD F.D.O.T. SPECIFICATIONS FOR ROAD AND BRIDGE CONSTRUCTION, LATEST EDITION.
ALTERNATE:
6" LIMEROCK BASE (LBR 100) OR RECYCLED CONCRETE BASE (LBR 130) FOR RESIDENTIAL COMPACTED TO 98% DENSITY BASED ON AASHTO T–180 MODIFIED PROCTOR TEST.

(G) SUB–BASE:
6" SUB–BASE COMPACTED TO 98% DENSITY BASED ON AASHTO T–180 MODIFIED PROCTOR TEST WITH MINIMUM LBR 40.

(H) SUBGRADE:
12" SUBGRADE COMPACTED TO 98% DENSITY BASED ON AASHTO T–180 MODIFIED PROCTOR TEST WITH MINIMUM LBR 40.

NOTES:

1. ALL MATERIALS ARE TO BE APPROVED BY THE CITY'S DESIGNATED SITE INSPECTOR AND THE DEVELOPER'S LICENSED SOILS ENGINEER PRIOR TO PLACEMENT.
2. A CITY APPROVED REPRESENTATIVE OF A CERTIFIED SOIL LABORATORY SHALL BE PRESENT DURING ALL CONSTRUCTION PHASES UTILIZING A SOIL CEMENT BASE. THE REPRESENTATIVE SHALL BE CERTIFIED BY F.D.O.T. IN THE INSTALLATION OF SOIL CEMENT.

City of EDGEWATER Inc. 1951

STANDARD CONSTRUCTION DETAIL
50' or 60' R/W ROAD SECTION

FILE NAME:
EW_R1.DWG

DETAIL REF:
R–1

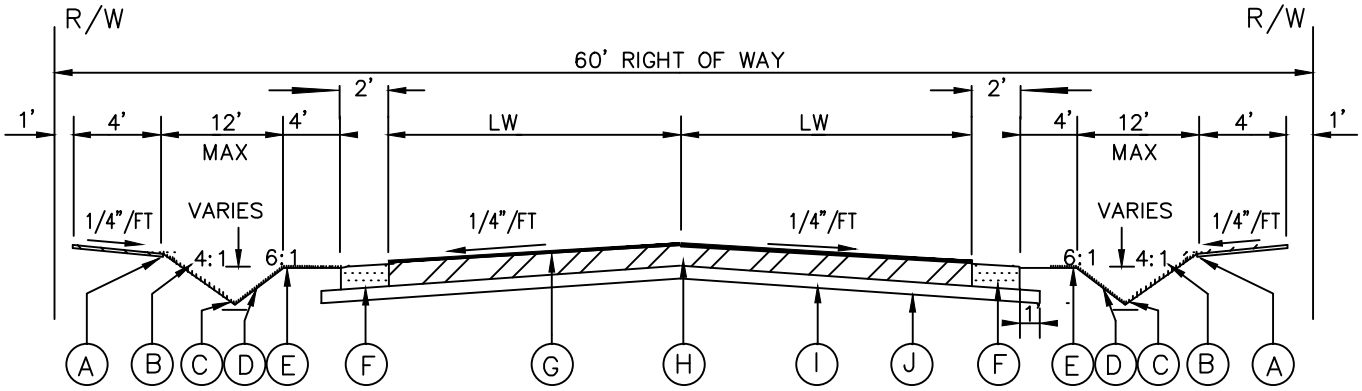

(A) 4" THICK, 3000 P.S.I.
6" THICK AT DRIVEWAY
3" MINIMUM ABOVE EDGE OF CURB

(B) MAXIMUM SLOPE ALLOWED

(C) MAXIMUM DEPTH 12"

(D) SOD or SEED AND MULCH PER F.D.O.T. STANDARD SPECIFICATION SECTION 570 OR 575, AS APPLICABLE.

(E) 4' WIDE AREA WITH MAXIMUM SLOPE OF 1" PER 4 FT.

(F) 6" THICK CONCRETE ENVIRONMENTAL CURB, 3000 P.S.I. (SEE DETAIL R-9)

(G) ASPHALT PAVEMENT:
1-1/4" ASPHALT BITUMINOUS CONCRETE TYPE S-III; MINIMUM MARSHALL FIELD STABILITY 1500, COMPACTED TO 98% DENSITY PER FM 1-T238 (METHOD B), NUCLEAR DENSITY TEST, "BACK SCATTER METHOD".

(H) BASE:
6" SOIL CEMENT BASE FOR RESIDENTIAL MINIMUM BEARING STRENGTH OF 350 P.S.I. SHALL BE OBTAINED WITHIN 7 DAYS AND COMPACTED TO 98% DENSITY PER AASHTO T-99 STANDARD PROCTOR TEST; CONSTRUCTION METHODS SHALL CONFORM TO SECTION 270 OF STANDARD F.D.O.T. SPECIFICATIONS FOR ROAD AND BRIDGE CONSTRUCTION, LATEST EDITION.
ALTERNATE:
6" LIMEROCK BASE (LBR 100) OR RECYCLED CONCRETE BASE (LBR 130) FOR RESIDENTIAL COMPACTED TO 98% DENSITY BASED ON AASHTO T-180 MODIFIED PROCTOR TEST.

(I) SUB-BASE:
6" SUB-BASE COMPACTED TO 98% DENSITY BASED ON AASHTO T-180 MODIFIED PROCTOR TEST WITH MINIMUM LBR 40.

(J) SUBGRADE:
12" SUBGRADE COMPACTED TO 98% DENSITY BASED ON AASHTO T-180 MODIFIED PROCTOR TEST WITH MINIMUM LBR 40.

NOTES:

1. FOR REQUIRED PAVEMENT WIDTH, LW, REFER TO ROADWAY GEOMETRY DETAIL.

2. ALL MATERIALS ARE TO BE APPROVED BY THE CITY'S DESIGNATED SITE INSPECTOR AND THE DEVELOPER'S LICENSED SOILS ENGINEER PRIOR TO PLACEMENT.

3. A CITY APPROVED REPRESENTATIVE OF A CERTIFIED SOIL LABORATORY SHALL BE PRESENT DURING ALL CONSTRUCTION PHASES UTILIZING A SOIL CEMENT BASE. THE REPRESENTATIVE SHALL BE CERTIFIED BY F.D.O.T. IN THE INSTALLATION OF SOIL CEMENT.

City of EDGEWATER Inc. 1951

STANDARD CONSTRUCTION DETAIL
60' R/W WITH DITCH ROAD SECTION

FILE NAME:
EW_R2.DWG

DETAIL REF:
R-2

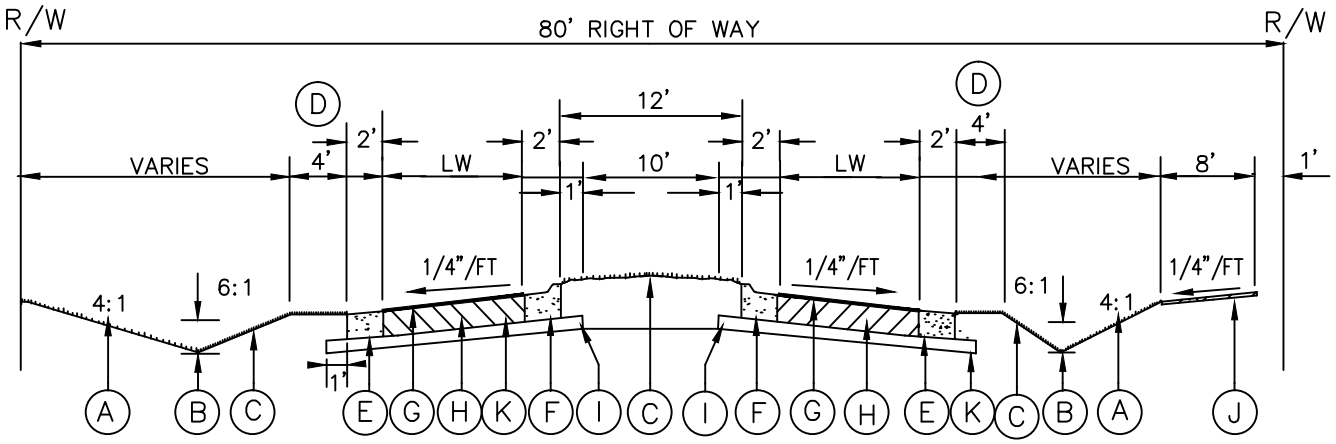

(A) MAXIMUM SLOPE ALLOWED

(B) MAXIMUM DEPTH 18"

(C) SOD or SEED AND MULCH PER F.D.O.T. STANDARD SPECIFICATION SECTION 570 OR 575 AS APPLICABLE.

(D) 4' WIDE AREA WITH MAXIMUM SLOPE OF 1" PER 4 FT.

(E) 6" THICK CONCRETE ENVIRONMENTAL CURB, 3000 P.S.I. (SEE DETAIL R-9)

(F) F.D.O.T. TYPE F CONCRETE CURB, 3000 P.S.I., SLOPED TO DRAIN WATER FROM GUTTER TO ROAD

(G) ASPHALT PAVEMENT:
1-1/4" ASPHALT BITUMINOUS CONCRETE TYPE S-III; MINIMUM MARSHALL FIELD STABILITY 1500, COMPACTED TO 98% DENSITY PER FM 1-T238 (METHOD B), NUCLEAR DENSITY TEST, "BACK SCATTER METHOD".

(H) BASE:
6" SOIL CEMENT BASE FOR RESIDENTIAL MINIMUM BEARING STRENGTH OF 350 P.S.I. SHALL BE OBTAINED WITHIN 7 DAYS AND COMPACTED TO 98% DENSITY BASED ON AASHTO T-99 STANDARD PROCTOR TEST; CONSTRUCTION METHODS SHALL CONFORM TO SECTION 270 OF STANDARD F.D.O.T. SPECIFICATIONS FOR ROAD AND BRIDGE CONSTRUCTION, LATEST EDITION.

ALTERNATE:
6" LIMEROCK BASE (LBR 100) OR RECYCLED CONCRETE BASE (LBR 130) FOR RESIDENTIAL COMPACTED TO 98% DENSITY BASED ON AASHTO T-180 MODIFIED PROCTOR TEST.

(I) SUB-BASE:
6" SUB-BASE COMPACTED TO 98% DENSITY BASED ON AASHTO T-180 MODIFIED PROCTOR TEST WITH MINIMUM LBR 40.

(J) 8'-0" WIDE CONCRETE SIDEWALK (ON ONE OR BOTH SIDES AS REQ'D BY PLANNING AND ZONING DEPT).
4" THICK, 3000 P.S.I. 6" THICK AT DRIVEWAY

(K) SUBGRADE:
12" SUBGRADE COMPACTED TO 98% DENSITY BASED ON AASHTO T-180 MODIFIED PROCTOR TEST WITH MINIMUM LBR 40.

SEE NOTES ON SHEET R-3B

City of EDGEWATER Inc. 1951

STANDARD CONSTRUCTION DETAIL

80' R/W WITH MEDIAN AND DITCH ROAD SECTION

FILE NAME: EW_R3A.DWG

DETAIL REF: R-3A

80' R/W WITH MEDIAN AND DITCH ROAD SECTION (CONTD.)

NOTES:

1. FOR REQUIRED PAVEMENT WIDTH, LW, REFER TO ROADWAY GEOMETRY DETAIL.
2. ALL MATERIALS ARE TO BE APPROVED BY THE CITY'S DESIGNATED SITE INSPECTOR AND THE DEVELOPER'S LICENSED SOILS ENGINEER PRIOR TO PLACEMENT.
3. A CITY APPROVED REPRESENTATIVE OF A CERTIFIED SOIL LABORATORY SHALL BE PRESENT DURING ALL CONSTRUCTION PHASES UTILIZING A SOIL CEMENT BASE. THE REPRESENTATIVE SHALL BE CERTIFIED BY F.D.O.T. IN THE INSTALLATION OF SOIL CEMENT.

City of EDGEWATER Inc. 1951	STANDARD CONSTRUCTION DETAIL 80' R/W WITH MEDIAN AND DITCH ROAD SECTION	FILE NAME: EW_R3B.DWG DETAIL REF: R-3B

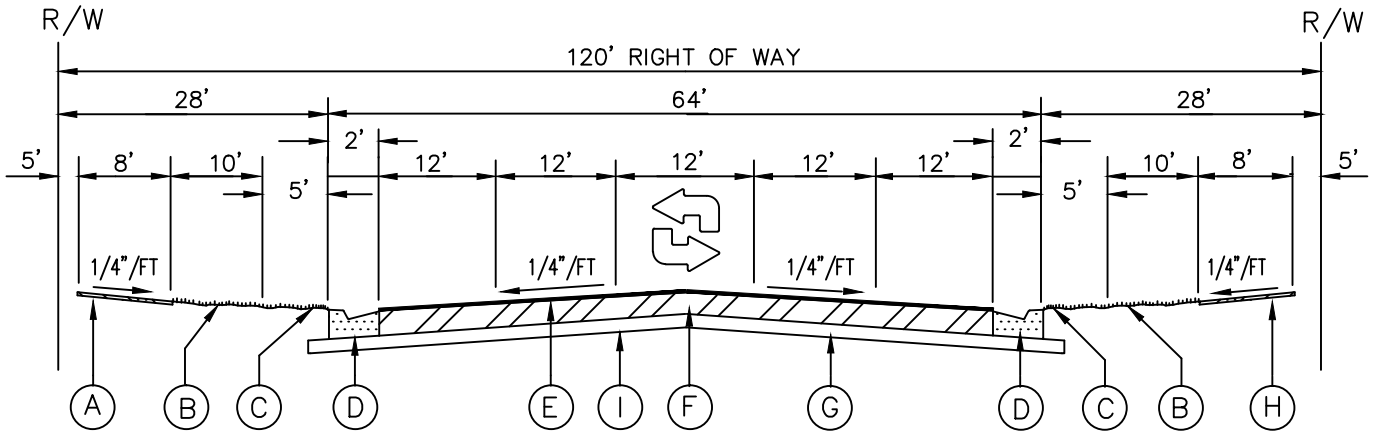

(A) 8'–0" WIDE CONCRETE BIKEPATH
4" THICK, 3000 P.S.I.
6" THICK AT DRIVEWAY
3" MINIMUM ABOVE TOP OF CURB

(B) SOD or SEED AND MULCH PER F.D.O.T. STANDARD SPECIFICATION SECTION 570 OR 575, AS APPLICABLE. MAINTAIN POSITIVE DRAINAGE FROM EDGE OF WALK TO TOP OF CURB.

(C) 4' WIDE AREA WITH MAXIMUM SLOPE OF 1" PER 4 FT.

(D) F.D.O.T. TYPE F CONCRETE CURB, 3000 P.S.I.

(E) ASPHALT PAVEMENT:
1–1/2" ASPHALT BITUMINOUS CONCRETE TYPE S–III; MINIMUM MARSHALL FIELD STABILITY 1500, COMPACTED TO 98% DENSITY PER FM 1–T238 (METHOD B), NUCLEAR DENSITY TEST, "BACK SCATTER METHOD".

(F) BASE:
8" SOIL CEMENT BASE FOR COMMERCIAL MINIMUM BEARING STRENGTH OF 350 P.S.I. SHALL BE OBTAINED WITHIN 7 DAYS AND COMPACTED TO 98% DENSITY BASED ON AASHTO T–99 STANDARD PROCTOR TEST; CONSTRUCTION METHODS SHALL CONFORM TO SECTION 270 OF STANDARD F.D.O.T. SPECIFICATIONS FOR ROAD AND BRIDGE CONSTRUCTION, LATEST EDITION.
ALTERNATE:
6" LIMEROCK BASE (LBR 100) OR RECYCLED CONCRETE BASE (LBR 130) FOR RESIDENTIAL COMPACTED TO 98% DENSITY BASED ON AASHTO T–180 MODIFIED PROCTOR TEST.

(G) SUB–BASE:
6" SUB–BASE COMPACTED TO 98% DENSITY BASED ON AASHTO T–180 MODIFIED PROCTOR TEST WITH MINIMUM LBR 40.

(H) 8'–0" WIDE CONCRETE SIDEWALK
4" THICK, 3000 P.S.I.
6" THICK AT DRIVEWAY

(I) SUBGRADE:
12" SUBGRADE COMPACTED TO 98% DENSITY BASED ON AASHTO T–180 MODIFIED PROCTOR TEST WITH MINIMUM LBR 40.

SEE NOTES ON SHEET R–4B

City of EDGEWATER Inc. 1957

STANDARD CONSTRUCTION DETAIL
120' R/W WITH 5 LANE ROAD SECTION
(COLLECTOR ROADS)

FILE NAME:
EW_R4A.DWG

DETAIL REF:
R–4A

100' R/W WITH 5 LANE ROAD SECTION (CONTD.)

NOTES:

1. ALL MATERIALS ARE TO BE APPROVED BY THE CITY'S DESIGNATED SITE INSPECTOR AND THE DEVELOPER'S LICENSED SOILS ENGINEER PRIOR TO PLACEMENT.
2. A CITY APPROVED REPRESENTATIVE OF A CERTIFIED SOIL LABORATORY SHALL BE PRESENT DURING ALL CONSTRUCTION PHASES UTILIZING A SOIL CEMENT BASE. THE REPRESENTATIVE SHALL BE CERTIFIED BY F.D.O.T. IN THE INSTALLATION OF SOIL CEMENT.

City of EDGEWATER Inc. 1951	STANDARD CONSTRUCTION DETAIL 100' R/W WITH 5 LANE ROAD SECTION	FILE NAME: EW_R4B.DWG DETAIL REF: R-4B

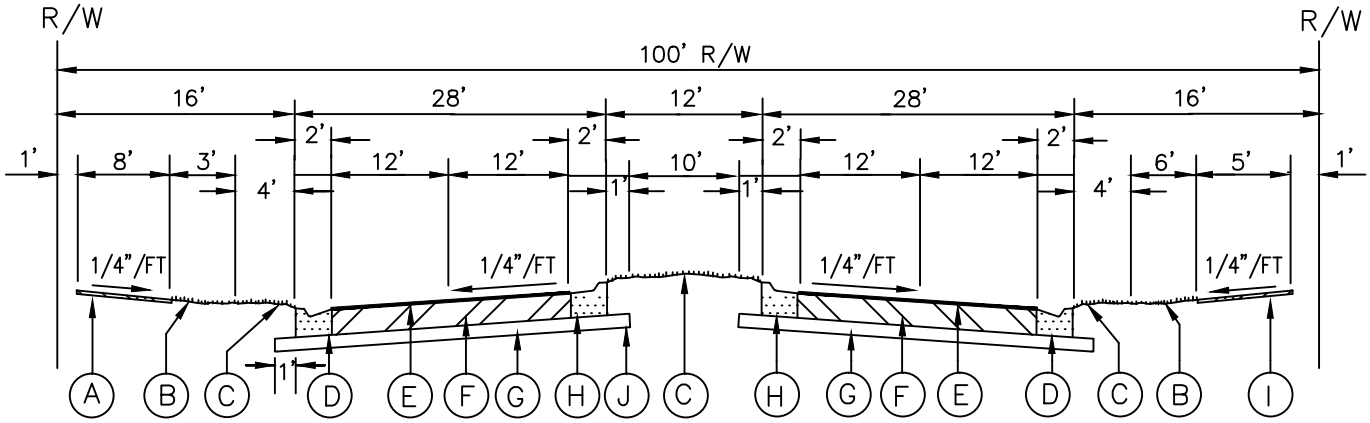

(A) 8'–0" WIDE CONCRETE BIKEPATH
4" THICK, 3000 P.S.I.
6" THICK AT DRIVEWAY
3" MINIMUM ABOVE TOP OF CURB

(B) SOD or SEED AND MULCH PER F.D.O.T. STANDARD SPECIFICATION SECTION 570 OR 575, AS APPLICABLE. MAINTAIN POSITIVE DRAINAGE FROM EDGE OF WALK TO TOP OF CURB.

(C) 4' WIDE AREA WITH MAXIMUM SLOPE OF 1" PER 4 FT.

(D) F.D.O.T. TYPE F CONCRETE CURB, 3000 P.S.I.

(E) ASPHALT PAVEMENT:
1–1/2" ASPHALT BITUMINOUS CONCRETE TYPE S–III; MINIMUM MARSHALL FIELD STABILITY 1500, COMPACTED TO 98% DENSITY PER FM 1–T238 (METHOD B), NUCLEAR DENSITY TEST, "BACK SCATTER METHOD".

(F) BASE:
8" SOIL CEMENT BASE FOR COMMERCIAL MINIMUM BEARING STRENGTH OF 350 P.S.I. SHALL BE OBTAINED WITHIN 7 DAYS AND COMPACTED TO 98% DENSITY BASED ON AASHTO T–99 STANDARD PROCTOR TEST, CONSTRUCTION METHODS SHALL CONFORM TO SECTION 270 OF STANDARD F.D.O.T. SPECIFICATIONS FOR ROAD AND BRIDGE CONSTRUCTION, LATEST EDITION.
ALTERNATE:
6" LIMEROCK BASE (LBR 100) OR RECYCLED CONCRETE BASE (LBR 130) FOR RESIDENTIAL COMPACTED TO 98% DENSITY BASED ON AASHTO T–180 MODIFIED PROCTOR TEST.

(G) SUB–BASE:
6" SUB–BASE COMPACTED TO 98% DENSITY BASED ON AASHTO T–180 MODIFIED PROCTOR TEST WITH MINIMUM LBR 40.

(H) F.D.O.T. TYPE F CONCRETE CURB, 3000 P.S.I., SLOPED TO DRAIN WATER FROM GUTTER TO ROAD

(I) 5'–0" WIDE CONCRETE SIDEWALK
4" THICK, 3000 P.S.I.
6" THICK AT DRIVEWAY

(J) SUBGRADE:
12" SUBGRADE COMPACTED TO 98% DENSITY BASED ON AASHTO T–180 MODIFIED PROCTOR TEST WITH MINIMUM LBR 40.

NOTES:

1. ALL MATERIALS ARE TO BE APPROVED BY THE CITY'S DESIGNATED SITE INSPECTOR AND THE DEVELOPER'S LICENSED SOILS ENGINEER PRIOR TO PLACEMENT.

2. A CITY APPROVED REPRESENTATIVE OF A CERTIFIED SOIL LABORATORY SHALL BE PRESENT DURING ALL CONSTRUCTION PHASES UTILIZING A SOIL CEMENT BASE. THE REPRESENTATIVE SHALL BE CERTIFIED BY F.D.O.T. IN THE INSTALLATION OF SOIL CEMENT.

City of EDGEWATER Inc. 1951

STANDARD CONSTRUCTION DETAIL
100' R/W WITH 4 LANE AND MEDIAN ROAD SECTION

FILE NAME:
EW_R5.DWG

DETAIL REF:
R–5

ROAD CLASSIFICATION	DESIGN SPEED (MPH)	LANE WIDTH (LW)	RIGHT OF WAY WIDTH	MIN. HORIZ. RADIUS C.L.	MIN. VERT. CURVE	MIN. LONG. GRADE (%)	MIN. INT. SPACE
LOCAL / COLLECTOR							
UP TO 400 VPD	15	10	50	50'	75'	0.3	150'
	20	10	50	95'	125'	0.3	200'
	25	11	50	180'	165'	0.3	250'
UP TO 1000 VPD	20	11	50	95'	125'	0.3	200'
	25	11	60	180'	165'	0.3	250'
UP TO 5000 VPD	30	12	80	300'	200'	0.3	330'
	35	12	80	375'	225'	0.5	660'
	40	12	80	450'	275'	0.5	660'
ARTERIAL							
UP TO 7500 VPD	35	5 LANES (3)		375'	225'	0.5	660'
	40			450'	275'	0.5	660'
OVER 7500 VPD	40			450'	275'	0.5	660'

NOTES:

1. ALL ROADWAY DESIGN SHALL MEET THE MINIMUM REQUIREMENTS OF THE MANUAL OF UNIFORM MINIMUM STANDARDS FOR DESIGN, CONSTRUCTION, AND MAINTENANCE FOR STREETS AND HIGHWAYS (LATEST EDITION), AS PUBLISHED BY THE FLORIDA DEPARTMENT OF TRANSPORTATION.
2. PAVEMENT WIDTHS FOR INDUSTRIAL AND COMMERCIAL ROADS SHALL BE INCREASED BY A MINIMUM OF ONE (1) FOOT.
3. AS A RULE, ALL INTERSECTIONS SHALL BE DESIGNED AT 90 DEGREE ANGLES. DEVIATION FROM THIS SHALL BE CONSIDERED STRICTLY ON A CASE BY CASE BASIS. IN THE EVENT THAT ANY DEVIATION IS PERMITTED, THEN IN NO CASE SHALL INTERSECTION ANGLES BE LESS THAN 75 DEGREES FOR INTERSECTIONS WITH ARTERIAL ROADWAYS EXCEPT ON LOCAL AND COLLECTOR ROADWAYS WHICH SHALL NOT BE LESS THAN 60 DEGREES. INTERSECTIONS WITH COUNTY AND STATE ROADS SHALL BE 90 DEGREES.
4. ALL INTERSECTIONS AND ACCESS POINTS SHALL HAVE ADEQUATE LINE OF SIGHT BASED ON AN EYE LEVEL OF 3.5' ABOVE THE GROUND AND AN OBJECT 3.0' ABOVE THE LOWEST ROADWAY. FOR PURPOSES OF THIS STANDARD, THE EYE LEVEL SHALL BE MEASURED 8' IN BACK OF THE STOP BAR AT ENTRANCES. THE FOLLOWING SIGHT DISTANCES SHALL BE PROVIDED:
5. TRAFFIC ANALYSIS IS REQUIRED FOR ANY NEW DEVELOPMENT PROJECT THAT MAY PRODUCE 500 OR MORE NEW AVERAGE DAILY TRIPS.

LEGEND:

C.L.	CENTER–LINE
INT.	INTERSECTION
LONG.	LONGITUDINAL

DESIGN SPEED (MPH)	20	25	30	35	40	45	50	55
SIGHT DISTANCE (FT) (MINIMUM)	200	250	300	350	400	450	500	550

City of EDGEWATER Inc. 1951

STANDARD CONSTRUCTION DETAIL
ROADWAY GEOMETRY

FILE NAME: EW_R6.DWG

DETAIL REF: R–6

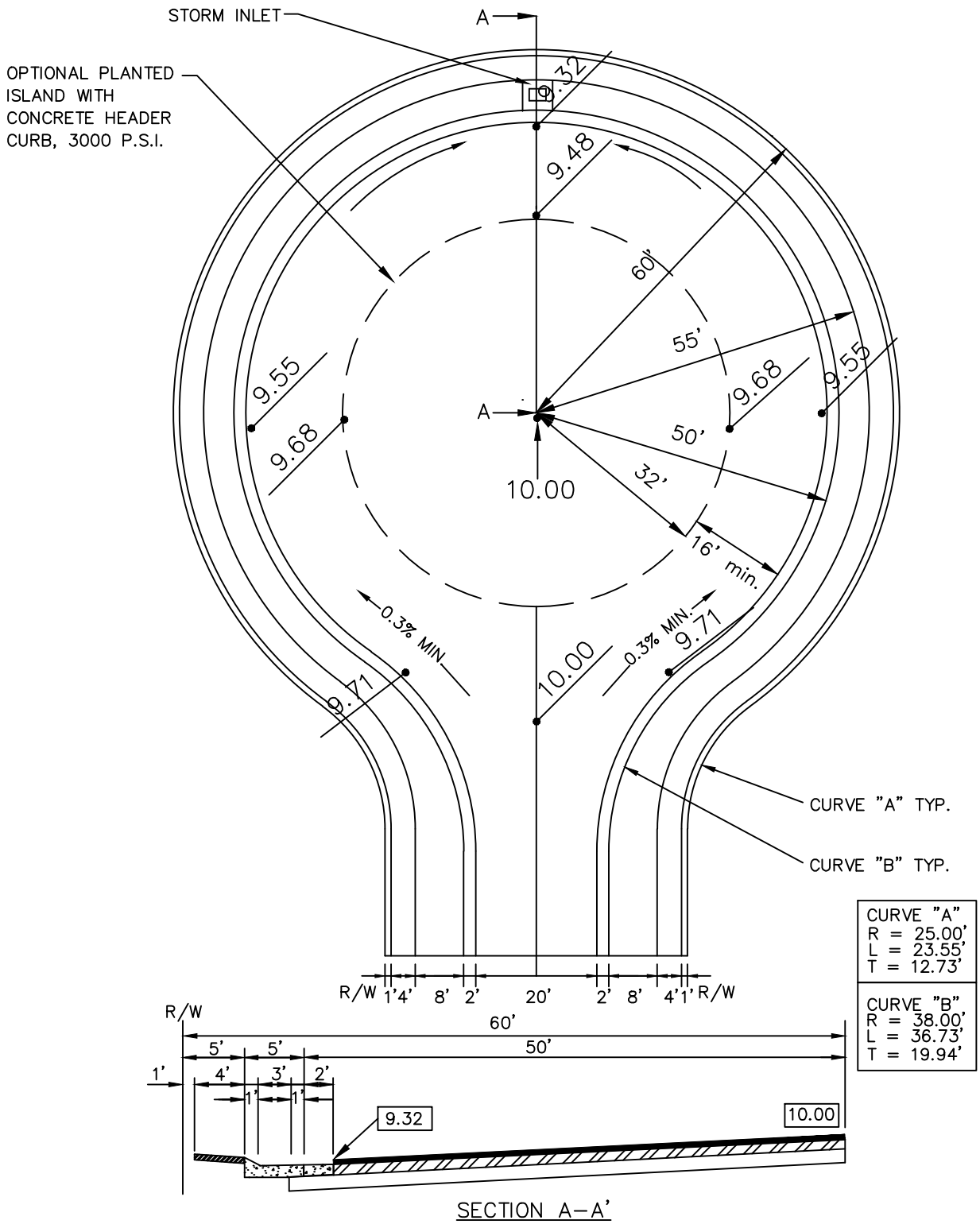

CURVE "A"
R = 25.00'
L = 23.55'
T = 12.73'

CURVE "B"
R = 38.00'
L = 36.73'
T = 19.94'

* THIS ALTERNATE IS SUBJECT TO SITE SPECIFIC APPROVAL

City of EDGEWATER Inc. 1951

STANDARD CONSTRUCTION DETAIL

STANDARD CUL–DE–SAC DETAIL
WITH SINGLE STORM INLET
"ALTERNATE"

FILE NAME:

EW_R7A.DWG

DETAIL REF:

R–7

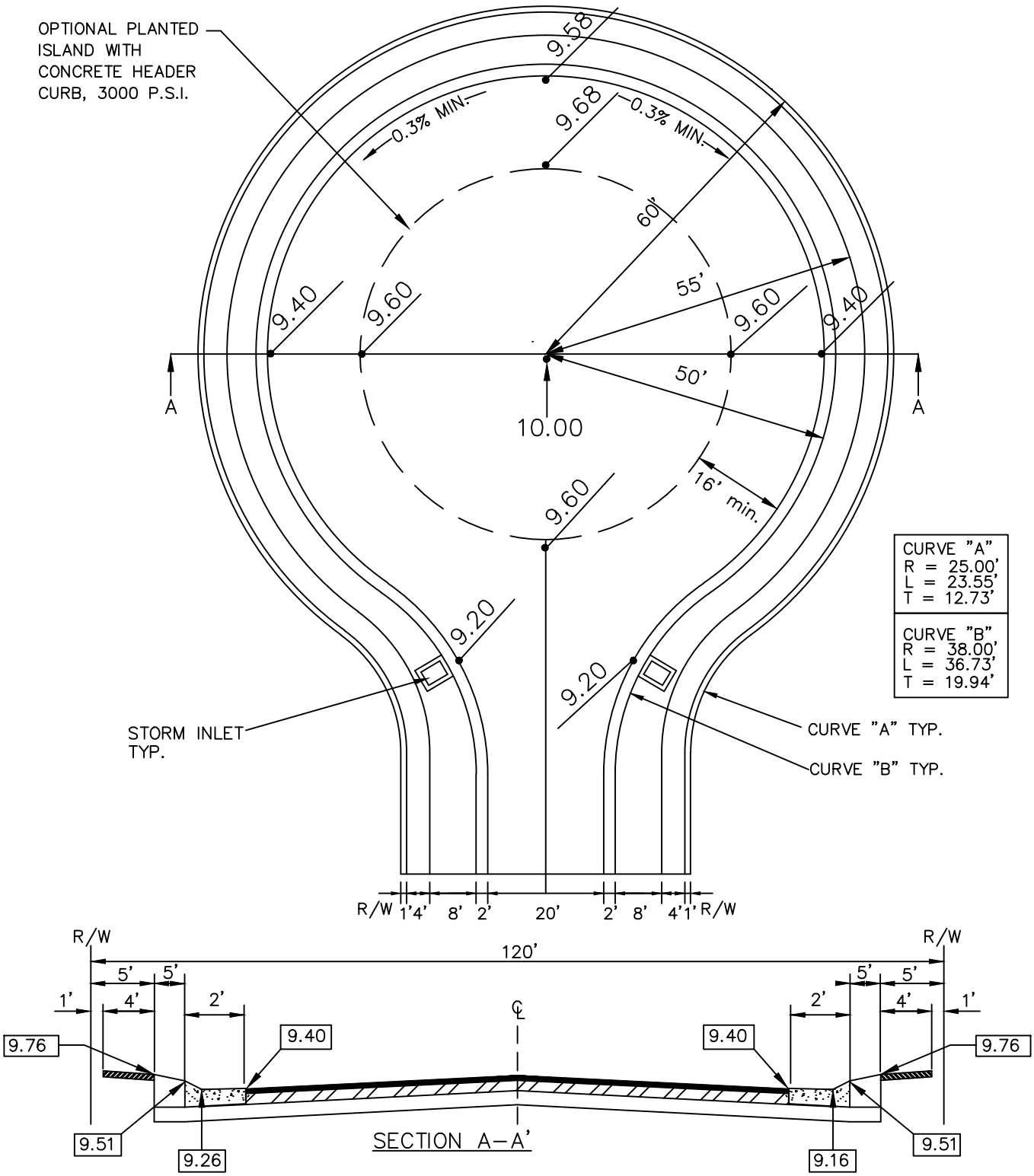

City of EDGEWATER Inc. 1951	STANDARD CONSTRUCTION DETAIL STANDARD CUL–DE–SAC DETAIL WITH DUAL STORM INLET "PREFERRED"	FILE NAME: EW_R8A.DWG DETAIL REF: R–8

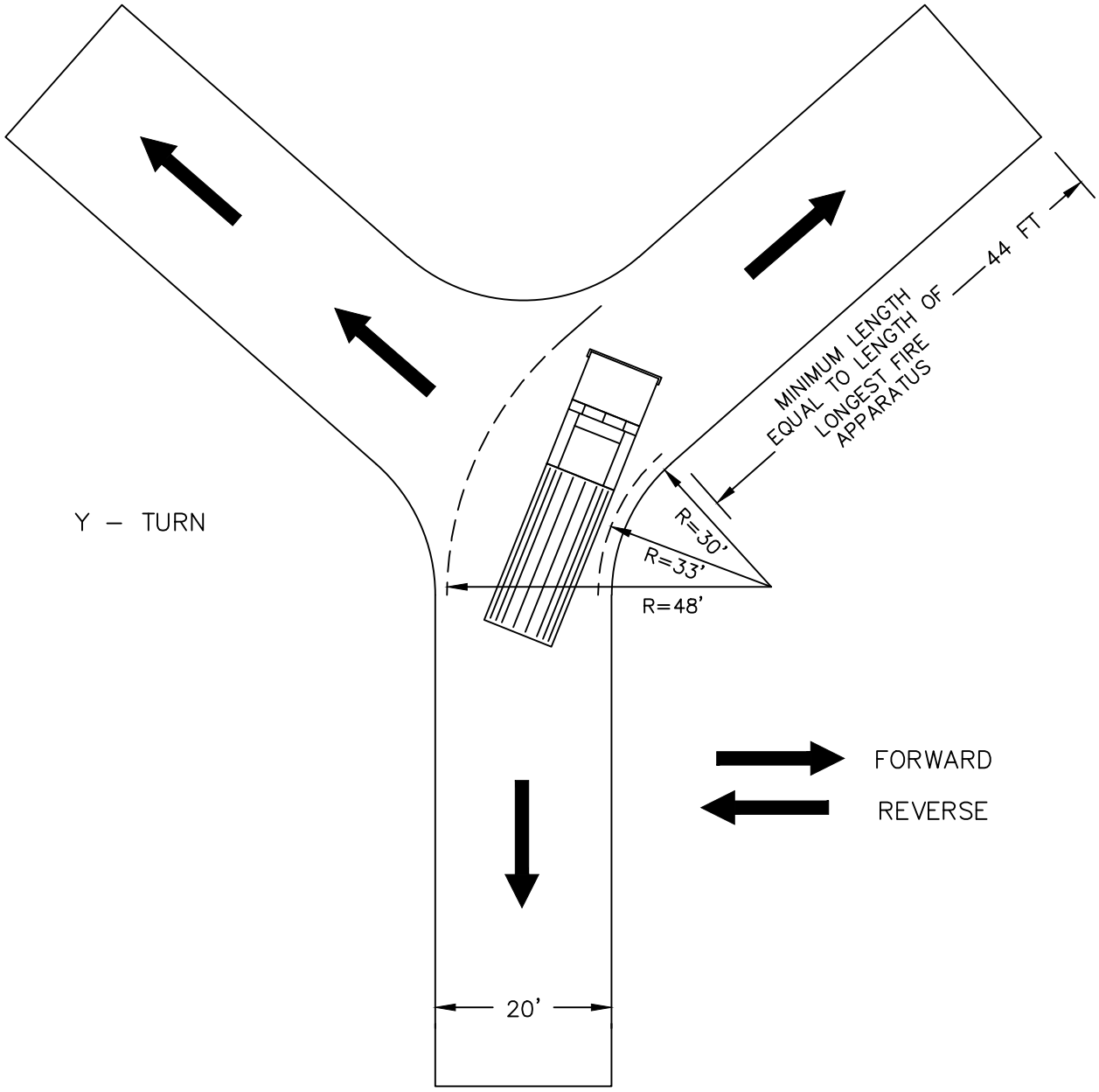

* ONLY ALLOWABLE GIVEN SPECIAL AUTHORIZATION FOR UNUSUAL CIRCUMSTANCES

City of EDGEWATER Inc. 1951	STANDARD CONSTRUCTION DETAIL Y – TURN	FILE NAME: EW_R8A.DWG DETAIL REF: R–8A

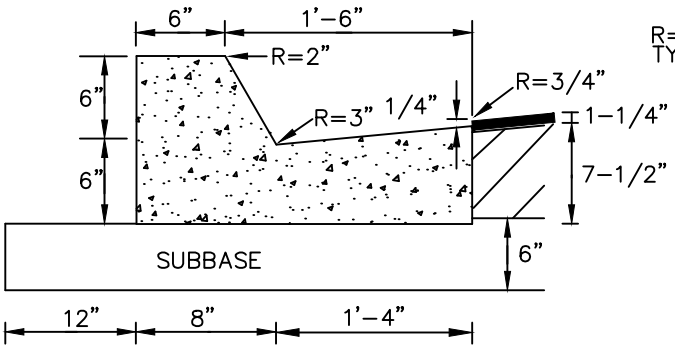

F.D.O.T. TYPE "F" CURB

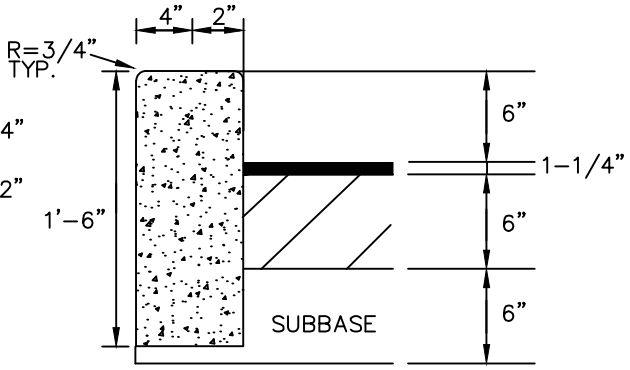

HEADER CURB

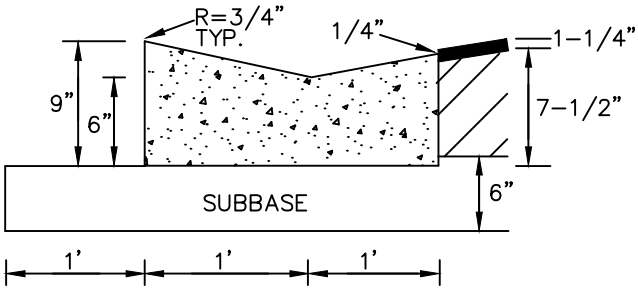

MIAMI CURB

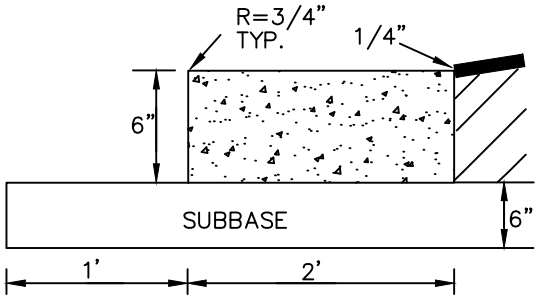

ENVIRONMENTAL CURB

NOTES:

1. ALL CURBS TO BE CONSTRUCTED OF 28 DAY, 3000 P.S.I. CONCRETE
2. 1/2" PRE-MOLDED EXPANSION JOINT REQUIRED EVERY 500', CONSTRUCTION JOINT REQUIRED EVERY 10' MAXIMUM (4' MINIMUM).
3. 1/2" PRE-MOLDED EXPANSION JOINT REQUIRED AT EACH SIDE OF ALL STORM INLET STRUCTURES AND AT ALL RADIUS POINTS.
4. 6" SUBBASE TO BE COMPACTED AND TESTED TO 98% DENSITY BASED ON AASHTO T-180 MODIFIED PROCTOR TEST AND SHALL BE STABILIZED TO A MINIMUM L.B.R. 40.
5. EXPANSION JOINT MATERIAL MUST COVER THE ENTIRE CROSS SECTION OF CURB.
6. IN NO INSTANCE SHALL EXTRUDED CURBS (DEFINED AS HEADER-TYPE CURBS INSTALLED DIRECTLY ON TOP OF PAVEMENT) BE PERMITTED.
7. ALL ASPHALT AND/OR PAVER DRIVEWAY APRONS LOCATED IN PUBLIC RIGHTS-OF-WAY, SHALL INCLUDE CURBING.

City of EDGEWATER Inc. 1951	STANDARD CONSTRUCTION DETAIL STANDARD CURB CONSTRUCTION	FILE NAME: EW_R9.DWG DETAIL REF: R-9

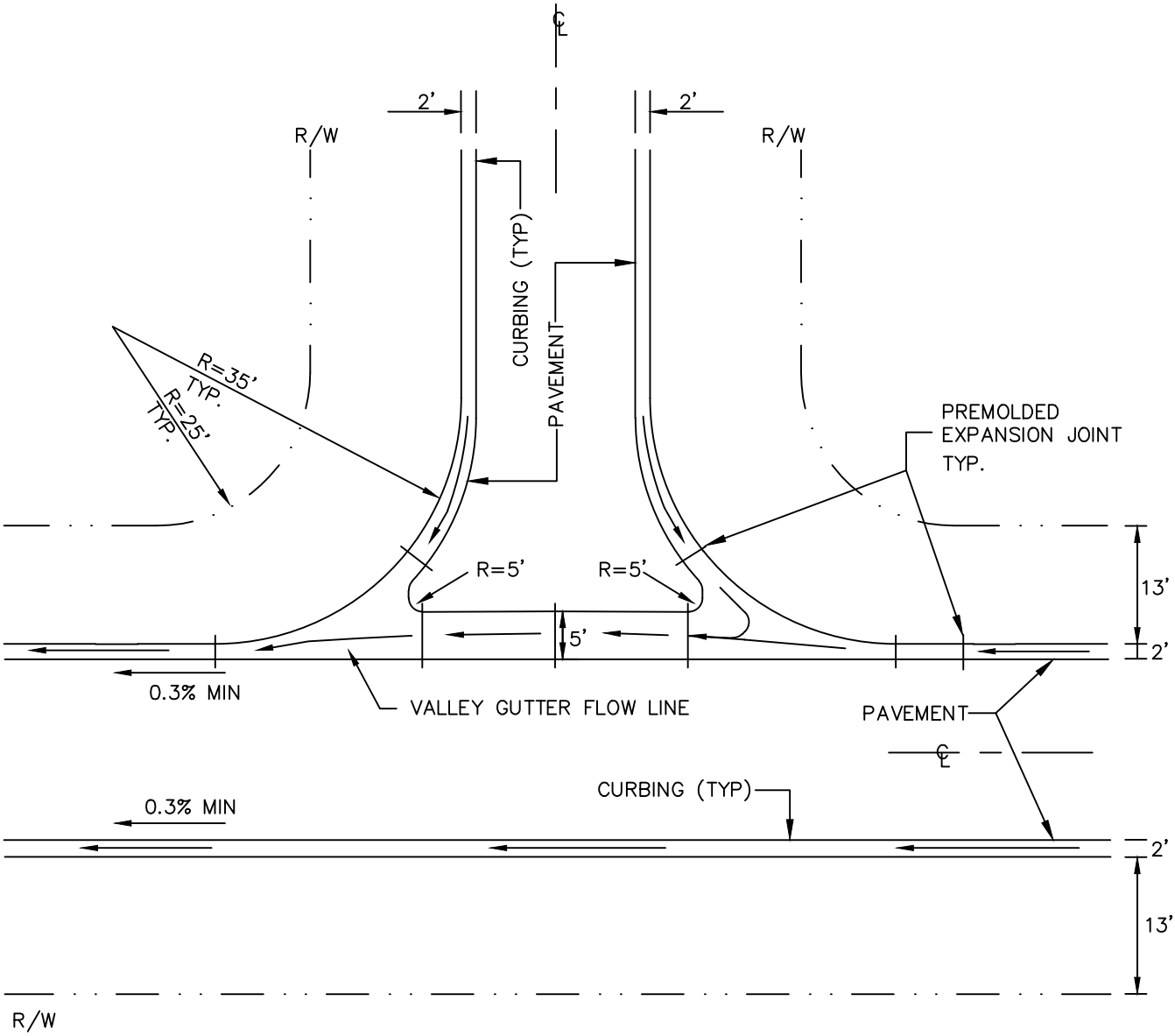

NOTES:

1. VALLEY GUTTER TO HAVE A STANDARD MINIMUM LONGITUDINAL SLOPE OF 0.30%
2. VALLEY GUTTER TO BE CONSTRUCTED OF 28 DAY, 3000 P.S.I. CONCRETE
3. 6" SUBBASE TO BE COMPACTED AND TESTED TO 98% DENSITY WITH MINIMUM L.B.R. 40 BASED ON AASHTO T-180 MODIFIED PROCTOR TEST.
4. VALLEY GUTTERS ARE REQUIRED WHEN STORMWATER CROSSES THE INTERSECTION OF ROADWAYS AND DRIVEWAY CONNECTIONS.
5. REFER TO F.D.O.T. STANDARD INDEX No. 300

City of EDGEWATER Inc. 1951

STANDARD CONSTRUCTION DETAIL
ROADWAY INTERSECTION VALLEY GUTTER

FILE NAME:
EW_R10.DWG

DETAIL REF:
R-10

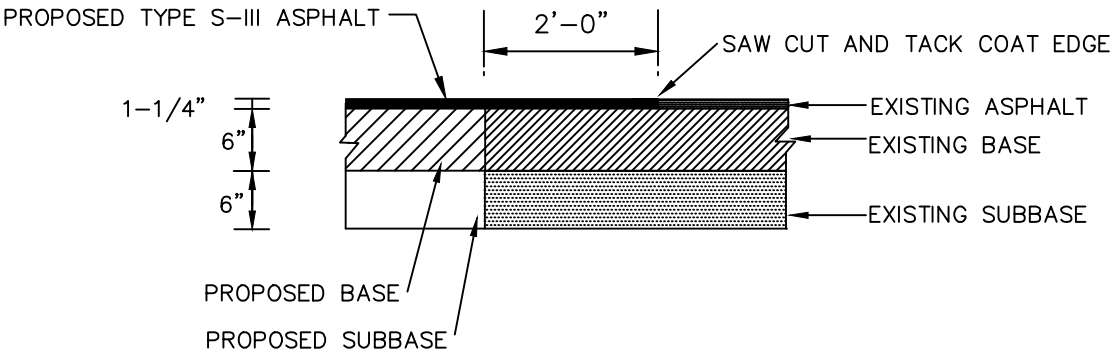

City of EDGEWATER Inc. 1951	STANDARD CONSTRUCTION DETAIL PAVEMENT BUTT JOINT	FILE NAME: EW_R11.DWG DETAIL REF: R-11

ROADWAY AND PARKING AREA DESIGN AND CONSTRUCTION NOTES

ALL MATERIALS AND INSTALLATION METHODS USED FOR LAND DEVELOPMENT CODE REQUIRED IMPROVEMENTS FOR SUBDIVISIONS AND SITE PLANS SHALL BE IN CONFORMANCE WITH THE CITY, FDOT STANDARD SPECIFICATIONS FOR ROAD AND BRIDGE CONSTRUCTION (LATEST EDITION), AND THE FDOT ROADWAY AND TRAFFIC DESIGN STANDARDS (LATEST EDITION).

1. ALL RIGHT–OF–WAY OTHER THAN ROADWAY AREAS SHALL BE SODDED. ALL SLOPES STEEPER THAN 6:1 SHALL REQUIRE SODDING. THE CITY RESERVES THE RIGHT TO REQUIRE SODDING IN SPECIAL AREAS WHERE EROSION IS A CONCERN.

2. THE FOLLOWING WILL BE THE STANDARD PROTECTION FOR DITCHES UNLESS DRAINAGE CALCULATIONS INDICATE OTHERWISE:

SWALE PROFILE GRADES	PROTECTION REQUIRED
0.2%– 1.0%	GRASSING AND MULCHING
1.0%–4.0%	SODDING
4.0% AND GREATER	DITCH PAVING

3. THE PAVEMENT, BASE, AND SUBBASE THICKNESS PRESENTED ON DETAILS REPRESENTS THE MINIMUM REQUIREMENTS FOR LOCAL PUBLIC STREETS AND PRIVATE PARKING LOTS. THE CITY RESERVES THE RIGHT AT IT'S DISCRETION TO INCREASE THESE REQUIREMENTS FOR COLLECTOR AND ARTERIAL ROADWAYS AND PRIVATE PARKING LOTS SUBJECTED TO HEAVY VEHICULAR COMMERCIAL TRAFFIC.

4. THE DEVELOPER SHALL PROVIDE AT THEIR OWN EXPENSE A CERTIFIED SOILS ENGINEERING LABORATORY TO PERFORM ALL FIELD AND LABORATORY TESTING REQUIRED TO VERIFY THAT THE CONSTRUCTION IS IN COMPLIANCE WITH THE CITY'S MINIMUM STANDARDS. IT IS THE RESPONSIBILITY OF THE DEVELOPER TO ENSURE THAT COPIES OF ALL TEST REPORTS ARE PROVIDED TO THE CITY'S DESIGNATED SITE INSPECTOR PRIOR TO THE PROJECT FINAL INSPECTION IN ORDER TO ALLOW PROJECT ACCEPTANCE BY THE CITY.

5. THE LIMITS OF STABILIZED SUBBASE SHALL EXTEND TO A DEPTH OF SIX INCHES (6") BELOW THE BOTTOM OF THE BASE AND OUTWARD TO TWELVE INCHES (12") BEYOND THE CURB.

6. THE STABILIZING MATERIAL, IF REQUIRED, SHOULD BE A HIGH BEARING VALUE SOIL, SAND–CLAY, LIMEROCK, RECYCLED CONCRETE, SHELL, OR OTHER MATERIAL AS APPROVED BY THE CITY'S DESIGNATED SITE INSPECTOR AND A LICENSED SOILS ENGINEER.

7. THE SUBBASE SHALL BE STABILIZED NOT LESS THAN FORTY (40) POUNDS LIMEROCK BEARING RATIO (LBR) TO A 6" MINIMUM DEPTH. A COMPACTION OF NO LESS THAN NINETY–EIGHT (98 %) PERCENT DENSITY BASED ON AASHTO T–180 SHALL BE REQUIRED.

8. FOR ROADWAYS, TESTS FOR SUBBASE BEARING CAPACITY AND COMPACTION SHALL BE DONE AT A MINIMUM OF EVERY 300 FEET AND SHALL BE STAGGERED TO THE LEFT, RIGHT, AND AT CENTER LINE OF THE ROADWAY. FOR SITE PLANS, TEST SHALL BE PERFORMED FOR EVERY 600 SQUARE YARDS OF STABILIZED AREA, OR PORTIONS THEREOF.

9. BASES FOR ALL STREETS SHALL HAVE A MINIMUM SIX INCH (6") DEPTH. SOIL CEMENT BASES SHALL HAVE A STRENGTH OF 350 POUNDS PER SQUARE INCH AT 7 DAYS COMPACTED TO 98% DENSITY PER AASHTO T–99 STANDARD PROCTOR TEST IN CONFORMANCE WITH SECTION 270 OF STANDARD F.D.O.T. SPECIFICATIONS FOR ROAD AND BRIDGE CONSTRUCTION (LATEST EDITION). RECYCLED CONCRETE OR LIMEROCK BASES SHALL BE COMPACTED TO 98% MAXIMUM DENSITY BASED ON AASHTO T–180 MODIFIED PROCTOR TEST.

9. ROADWAY DEFINITIONS

a. ARTERIALS: PROVIDE REGIONAL MOBILITY VIA BOTH UNINTERRUPTED FLOW AND INTERRUPTED FLOW SEGMENTS. ARTERIALS PROVIDE MOBILITY AROUND AND THROUGH URBAN AND COMMUNITY CORES, AND ACCOMMODATE RELATIVELY LONG TRIP LENGTHS AS OPPOSED TO PROVIDING ACCESS TO ADJACENT PROPERTIES. ARTERIAL ROADS ARE U.S. #1 AND S.R. #442.

b. COLLECTORS: PROVIDE FOR MOVEMENT BETWEEN LOCAL STREETS AND THE ARTERIAL NETWORK. COLLECTORS SERVE RESIDENTIAL, COMMERCIAL AND INDUSTRIAL AREAS.

c. LOCAL ROADS: PROVIDE DIRECT ACCESS TO ABUTTING PROPERTIES. LOCAL ROADS ACCOMMODATE TRAFFIC ORIGINATING IN OR TRAVELING TO PROPERTIES WITHIN A NEIGHBORHOOD, COMMERCIAL OR INDUSTRIAL DEVELOPMENT. LOCAL ROADS ARE NOT CONSIDERED PART OF THE MAJOR THOROUGHFARE SYSTEM.

City of EDGEWATER Inc. 1951

STANDARD CONSTRUCTION DETAIL

ROADWAY AND PARKING AREA DESIGN AND CONSTRUCTION NOTES

FILE NAME: EW_R12.DWG

DETAIL REF: R–12

ROADWAY AND PARKING AREA DESIGN AND CONSTRUCTION NOTES (CONTD.)

10. SOIL CEMENT AND RECYCLED CONCRETE MIX DESIGNS SHALL BE SUBMITTED BY A LICENSED SOILS ENGINEER TO THE CITY'S DESIGNATED SITE INSPECTOR PRIOR TO THE START OF SUBBASE PREPARATION. ALL MIX DESIGNS SHALL BE SUBJECT TO THE APPROVAL OF THE CITY.

11. CEMENT DELIVERY TICKETS SHALL BE PROVIDED TO THE CITY'S DESIGNATED SITE INSPECTOR AT THE TIME OF PLACEMENT. IF THE INSPECTOR IS NOT ON SITE THROUGHOUT THE ENTIRE INSTALLATION, ACCUMULATED DELIVERY TICKETS CAN BE PROVIDED TO THE INSPECTOR BY THE CONTRACTOR ON THE FOLLOWING DAY.

12. TESTING OF THE IN-PLACE BASE SHALL BE DONE AT INTERVALS EQUIVALENT TO SUBGRADE TESTING AND SHALL CONSIST OF, AS A MINIMUM, A MOISTURE CONTENT AND COMPACTION TEST.

13. PORTLAND CEMENT CONCRETE, LIMEROCK, RECYCLED CONCRETE, OR FULL DEPTH ASPHALT PAVEMENT MAY BE USED IN PLACE OF SOIL CEMENT BASE. ALL BASE AND ROADWAY DESIGNS SHALL BE SUBJECT TO THE APPROVAL OF THE CITY.

14. SOIL CEMENT BASE MATERIAL CONSTRUCTION SHALL BE CONTINUOUSLY SUPERVISED BY A SOILS TESTING LABORATORY AT THE DEVELOPER'S EXPENSE. THE TESTING LABORATORY SHALL PROVIDE AN ON-SITE TECHNICIAN CERTIFIED IN THE INSTALLATION OF SOIL CEMENT WITH THE CERTIFICATION RECOGNIZED BY F.D.O.T.

15. SOIL CEMENT PAVEMENT BASES WITH THE CURE COAT APPLIED SHALL BE ALLOWED TO CURE A MINIMUM OF SEVEN (7) DAYS UNDER NO TRAFFIC PRIOR TO PLACING ANY ASPHALT SURFACE. (TEST REPORTS ARE REQUIRED TO BE DELIVERED TO THE CITY'S DESIGNATED SITE INSPECTOR PRIOR TO TRAFFIC USAGE.)

16. RECYCLED CONCRETE CAN BE USED AS AN ALTERNATIVE BASE MATERIAL PROVIDED THE MATERIAL IS A MINIMUM OF 60% CARBONATE OF CALCIUM AND MAGNESIUM. THE MATERIAL SHALL BE LIMITED TO MAXIMUM OF 3% OF WATER SENSITIVE CLAY MATERIAL, LIQUID LIMIT SHALL NOT EXCEED 35 AND BE NON-PLASTIC, AND THE PLASTICITY INDEX SHALL NOT EXCEED 10. THE MATERIAL SHALL NOT CONTAIN ORGANIC MATERIAL, CHERTY OR OTHER EXTREMELY HARD PIECES, LUMPS, BALLS OR POCKETS OF SAND SIZE MATERIAL OF A QUANTITY AS TO BE DETRIMENTAL TO THE PROPER BONDING, FINISHING, OR STRENGTH OF THE RECYCLED CONCRETE BASE. FOR BASE APPLICATIONS, AT LEAST 97% (BY WEIGHT) OF THE MATERIAL SHALL PASS A 1" SIEVE AND FOR SUBBASE APPLICATIONS, AT LEAST 97% (BY WEIGHT) OF THE MATERIAL SHALL PASS A 1-1/2" SIEVE. FOR BOTH APPLICATIONS, THE MATERIAL SHALL BE GRADED UNIFORMLY DOWN TO DUST AND THE MINIMUM LBR VALUES ARE TO BE NOT LESS THAN 130. COARSE AGGREGATE USED IN THE RECYCLED CONCRETE SHALL HAVE A MAXIMUM LOSS OF 45% PER LOS ANGELES ABRASION TEST. ALL MATERIALS SHALL BE WELL GRADED IN ACCORDANCE WITH REQUIREMENTS SET FORTH IN SECTION 204, F.D.O.T., STANDARD SPEC. FOR ROAD AND BRIDGE CONSTRUCTION., (LATEST EDITION).

17. RECYCLED CONCRETE OR LIMEROCK FOR BASE OR SUBBASE APPLICATIONS SHALL BE ALLOWED ON CITY ROADWAYS ONLY WHERE THE LOWEST ELEVATION OF THE ROADWAY SUBBASE IS A MINIMUM OF 6" ABOVE THE SEASONAL HIGH GROUNDWATER TABLE AS CERTIFIED BY A FLORIDA LICENSED PROFESSIONAL SOILS ENGINEER AND SUBSEQUENTLY APPROVED FOR BY THE CITY. IN AREAS NOT MEETING THESE STANDARDS A SOIL CEMENT BASE WILL BE REQUIRED. ALL CRUSHING OF RECYCLED CONCRETE SHALL BE DONE PRIOR TO THE MATERIAL BEING PLACED IN THE ROADWAY. TESTING SHALL HAVE THE SAME REQUIREMENTS AND BE PERFORMED AT THE SAME LOCATION AND INTERVALS AS REQUIRED FOR LIMEROCK.

ROADWAY AND PARKING AREA DESIGN AND CONSTRUCTION NOTES (CONTD.)

18. DESIGN MIXES AND PRODUCT GRADATION INFORMATION FOR ALL MATERIALS TO BE INSTALLED AS PART OF THE LAND DEVELOPMENT CODE REQUIRED IMPROVEMENTS SHALL BE SUBMITTED TO THE CITY'S DESIGNATED SITE INSPECTOR FOR ACCEPTANCE BY THE CITY. THE INFORMATION SHALL BE SUBMITTED NO LESS THAN THREE (3) WORKING DAYS PRIOR TO ANY CONSTRUCTION. SUBMITTALS SHALL INCLUDE, BUT NOT BE LIMITED TO, INFORMATION TO EVALUATE THE MATERIALS PROPOSED FOR INSTALLATION AS SUBBASE, BASE, AND PAVEMENT FOR ALL ROADWAY AND PARKING AREA SURFACES AS WELL AS SIMILAR INFORMATION FOR ALL OTHER CONCRETE SIDEWALKS, CURBING, AND COMPARABLE STRUCTURES AND APPLICATIONS.

19. PRIOR TO PLACEMENT FLORIDA STATE CERTIFIED BATCH PLANTS MUST CERTIFY TO THE CITY'S RESIDENT PROJECT INSPECTOR THAT THE ASPHALT DELIVERED TO THE SITE IS IN ACCORDANCE WITH THE APPROVED PLANS AND SPECIFICATIONS.

20. EXTRACTION AND GRADATION TESTS ON ASPHALT MIXES SHALL BE PROVIDED TO THE CITY'S DESIGNATED SITE INSPECTOR FOR EVERY 2500 SQUARE YARDS OF ASPHALT, OR PART THEREOF, TO ENSURE THAT DESIGN MIXES MEET THE CITY STANDARD SPECIFICATIONS.

21. FIELD TESTING OF THE ASPHALT PAVEMENT SHALL BE DONE AT INTERVALS EQUIVALENT TO SUBGRADE TESTING AND SHALL CONSIST OF, AS A MINIMUM, A COMPACTION TEST. ASPHALT PAVEMENT SHALL BE COMPACTED TO 98% DENSITY PER FM 1-T238 (METHOD B), NUCLEAR DENSITY TEST, "BACKSCATTER METHOD".

22. IN ADDITION TO THE FIELD DENSITY TESTS NOTED, THE CITY RESERVES THE RIGHT TO REQUIRE CORE SAMPLES OF PAVEMENT SECTIONS EXTRACTED AND TESTED BY A CERTIFIED SOILS ENGINEERING LABORATORY AT THE DEVELOPER'S EXPENSE. THE CITY'S DESIGNATED SITE INSPECTOR SHALL DESIGNATE THE LOCATIONS OF THE TEST CORE LOCATIONS.

23. THE ROADWAY CROWN SHALL HAVE A STANDARD ONE QUARTER INCH (1/4") PER FOOT SLOPE.

24. ALL ROADWAYS WITH CURB AND GUTTER SECTIONS SHALL HAVE AS A STANDARD A MINIMUM LONGITUDINAL SLOPE OF 0.30%. THE ROADWAY CENTERLINE SHALL BE CLEARLY MARKED ON THE DESIGN PLANS. AT A MINIMUM, DESIGN ROADWAY CENTERLINE ELEVATIONS SHALL BE NOTED AT ALL GRADE CHANGES AND AT 100' INTERVALS ALONG THE ROADWAY PROFILE ON BOTH THE DESIGN PLANS AND AS-BUILT DRAWINGS.

25. THE FINISHED PAVEMENT EDGE SHALL BE WITHIN ONE QUARTER INCH (1/4") ABOVE THE ADJACENT CONCRETE CURB FOR CURBS COLLECTING AND CONVEYING STORMWATER.

26. CONCRETE CURBS SHALL BE PROVIDED ON BOTH SIDES OF ALL STREETS AND ALL CONCRETE CURBS SHALL BE CONSTRUCTED WITH 3000 P.S.I. CONCRETE AT 28 DAYS.

ROADWAY AND PARKING AREA DESIGN AND CONSTRUCTION NOTES (CONTD.)

27. CONCRETE CURBING, SIDEWALKS, PAVEMENT AND SIMILAR CONCRETE AREAS SHALL BE SAW CUT WITHIN 4 TO 18 HOURS OF PLACEMENT. SAW CUTS SHALL BE 1/4" IN WIDTH TO A DEPTH OF 1/4 OF THE TOTAL DEPTH OF CONCRETE OR 1–1/2", WHICHEVER IS LESS. SAW CUTS SHALL BE LOCATED AT INTERVALS OF TEN FEET (10') WITH EXPANSION JOINTS AT STREET INTERSECTIONS, RADIUS POINTS, STRUCTURES, AND ALONG CURVES AT SIXTY FEET (60') INTERVALS. ALL EXPANSION JOINT MATERIAL IS REQUIRED TO BE INSTALLED THROUGH THE ENTIRE DEPTH OF THE CONCRETE CURB. FOR LINEAL SECTIONS OF CURBS, EXPANSION JOINTS SHALL BE LOCATED AT A MAXIMUM SPACING OF FIVE–HUNDRED FEET (500') AND SHALL BE 1/2" IN WIDTH.

28. AN "X" SHALL BE CUT IN THE CURB TO MARK THE LOCATION OF WATER DISTRIBUTION SYSTEM VALVE.

29. A "V" SHALL BE CUT IN THE CURB TO MARK THE LOCATION OF ALL SEWER SERVICES.

30. A "⊥" SHALL BE CUT IN THE CURB TO MARK THE LOCATION OF ALL RECLAIMED WATER SERVICES.

31. A " Λ" SHALL BE CUT IN THE CURB TO MARK THE LOCATION OF ALL POTABLE WATER SERVICES.

32. BLUE REFLECTORS SHALL BE PLACED IN THE MIDDLE OF THE DRIVING LANE ON THE SIDE OF THE ROADWAY AND IN FRONT OF WHERE FIRE HYDRANTS ARE LOCATED.

33. THREE (3) CONCRETE CYLINDERS SHALL BE TAKEN AND TESTED (1 IN 14 DAYS AND 1 IN 28 DAYS) FOR EVERY SEVENTY–FIVE (75) CUBIC YARDS OF CONCRETE OR LESS PLACED. TEST RESULTS SHALL THEN BE PROVIDED TO THE CITY'S DESIGNATED SITE INSPECTOR AS THEY BECOME AVAILABLE.

34. A CONCRETE SLUMP TEST SHALL BE REQUIRED WITHIN THE FIRST 30 CUBIC YARDS OF CONCRETE. THEREAFTER, SLUMP TESTS SHALL BE REQUIRED FOR EVERY THIRTY (30) CUBIC YARDS OF CONCRETE, OR FRACTION THEREOF, WITH COPIES OF THE RESULTS PROVIDED TO THE CITY'S DESIGNATED SITE INSPECTOR. THE SLUMP TEST SHALL MEET THE REQUIRED MIX DESIGN ON EACH LOAD DELIVERED.

35. THE DEVELOPER SHALL PROVIDE ALL REQUIRED PAVEMENT MARKINGS ON ALL ROADWAYS PER CITY, COUNTY, AND STATE REQUIREMENTS. CENTERLINE STRIPES SHALL BE PROVIDED ON EXTENSIONS OF CITY COLLECTOR OR ARTERIAL ROADS, COUNTY ROADS, STATE HIGHWAYS, AND ALONG LOCAL STREETS IN THE VICINITY OF THEIR INTERSECTION WITH THE ABOVE MENTIONED ROADWAYS.

36. A FDOT APPROVED STOP SIGN AND A 24"–WIDE WHITE THERMOPLASTIC STOP BAR ARE REQUIRED AT ALL ROADWAY INTERSECTIONS.

37. ALL TRAFFIC CONTROL DEVICES PLACED AT INTERSECTIONS, PRIVATE STREETS, PUBLIC STREETS, COUNTY ROADS, AND STATE HIGHWAYS WITHIN THE CITY LIMITS SHALL BE INSTALLED ACCORDING TO THE MANUAL ON UNIFORM TRAFFIC CONTROL DEVICES, LATEST EDITION. THE MAINTENANCE–OF–TRAFFIC (MOT) INSTALLATION AND SUBSEQUENT OPERATION SHALL BE OVERSEEN BY A CONTRACTOR CERTIFIED BY THE AMERICAN TRAFFIC SAFETY SERVICES ASSOCIATION, OR EQUIVALENT CERTIFICATION RECOGNIZED BY FDOT.

ROADWAY AND PARKING AREA DESIGN AND CONSTRUCTION NOTES (CONTD.)

38. THE DEVELOPER IS RESPONSIBLE FOR PAYING FEES FOR TRAFFIC CONTROL DEVICES TO THE CITY FOR INSTALLATION. STREET SIGNS AND STOP SIGNS SHALL BE PLACED AT ALL INTERSECTIONS, INCLUDING BUT NOT LIMITED TO PRIVATE STREETS, PUBLIC STREETS, COUNTY ROADS, AND STATE HIGHWAYS WITHIN THE CITY LIMITS.

39. THE DEVELOPER IS RESPONSIBLE FOR PAYING FEES FOR ALL STREET LIGHTS PRIOR TO ACCEPTANCE OF THE PROJECT BY THE CITY.

40. FOUR FOOT (4') WIDE SIDEWALKS SHALL BE PROVIDED ON BOTH SIDES OF ALL RESIDENTIAL STREETS. (SEE DETAIL, INDEXES M–2 AND M–3)

41. BIKE PATHS SHALL BE CONSTRUCTED AT A MINIMUM OF SIX–FOOT WIDTH, PREFERABLY EIGHT–FOOT WIDTH AS DIRECTED BY THE CITY IN ACCORDANCE WITH THE BICYCLE AND PEDESTRIAN TRAIL MASTER PLAN.

42. STANDARD TURNING RADII FOR INTERSECTIONS:

RESIDENTIAL STREETS WITH STATE & COUNTY ROADWAYS OR MAJOR THOROUGHFARES WITHIN THE CITY	35–50 FT.
ENTRANCES TO COMMERCIAL SITES OFF OF CITY STREETS	35 FT.
INTERSECTIONS INTERIOR IN SUBDIVISIONS	35 FT.

SHOULD VOLUSIA COUNTY OR THE FLORIDA DEPARTMENT OF TRANSPORTATION (F.D.O.T.) DETERMINE THAT LARGER RADII ARE WARRANTED WITHIN THEIR RIGHT–OF–WAY, THE LARGER RADII SHALL PREVAIL.

43. CONSTRUCTION METHODS AND DESIGN FOR CONCRETE PAVEMENT SHALL CONFORM TO FDOT STANDARD SPECIFICATION FOR ROAD AND BRIDGE CONSTRUCTION, LATEST EDITION.

44. ALL CONTRACTORS THAT ARE PERFORMING THE CONSTRUCTION OF LAND DEVELOPMENT CODE REQUIRED IMPROVEMENTS (INCLUDING WATER MAINS, SANITARY SEWER MAINS, RECLAIMED WATER MAINS, STORM WATER PIPES AND INLETS, ROADWAYS, AND PARKING FACILITIES) SHALL BE CERTIFIED WITH THE STATE OF FLORIDA BOARD OF PROFESSIONAL REGULATIONS (BPR) FOR THE TYPE OF WORK THAT THEY PERFORM.

45. ALL CONTRACTORS THAT ARE PERFORMING THE CONSTRUCTION WORK OF LAND DEVELOPMENT CODE REQUIRED IMPROVEMENTS SHALL BE LICENSED BY THE STATE OF FLORIDA AND REGISTERED WITH THE CITY. THE LICENSE AND REGISTRATION SHALL PERTAIN DIRECTLY TO THE TYPE OF WORK BEING PERFORMED.

46. EXCEPT AS PROVIDED IN THE LAND DEVELOPMENT CODE, ALL ELECTRIC, TELEPHONE, TELEVISION LINES AND SIMILAR UTILITIES ARE REQUIRED TO BE INSTALLED UNDERGROUND AT THE EXPENSE OF THE OWNER, DEVELOPER, AND BUILDER.

ROADWAY AND PARKING AREA DESIGN AND CONSTRUCTION NOTES (CONTD.)

47. UTILITY DEPTH:
    A. HIGH VOLTAGE UTILITIES SUCH AS POWER (FEEDER, SERVICE, AND DROPS) SHALL BE BURIED A MINIMUM OF 30 INCHES IN DEPTH.
    B. LOW VOLTAGE UTILITIES SUCH AS PHONE AND CABLE TV SHALL BE BURIED A MINIMUM OF 24 INCHES IN DEPTH FOR FEEDER AND SERVICES. SERVICE DROPS SHALL BE BURIED A MINIMUM OF 18 INCHES IN DEPTH.
    C. IN NO INSTANCE SHALL THE DEPTH OF COVER BE LESS THAN 30" FROM FINISHED GRADE TO THE TOP OF PIPE FOR POTABLE WATER MAINS, SANITARY SEWER MAINS, AND RECLAIMED WATER MAINS. HOWEVER, IN THE EVENT THAT THIS CONDITION CANNOT BE MET DUE TO UNANTICIPATED CONFLICTS DURING THE CONSTRUCTION PROCESS, DUCTILE IRON PRESSURE CLASS 350 OR CONCRETE ENCASEMENT MAY BE USED AS APPROVED BY THE CITY PUBLIC UTILITIES DEPARTMENT.

48. LANDSCAPE PLANS SHALL CLEARLY DEPICT THE DESIGN LOCATION OF PLANTINGS RELATIVE TO THE LOCATION OF UNDERGROUND AND OVERHEAD PUBLIC UTILITIES AND STORMWATER INFRASTRUCTURE IN ORDER TO EVALUATE POTENTIAL CONFLICTS.

TECHNICAL SPECIFICATIONS
FOR SITE PLANS AND SUBDIVISIONS TESTING

A. MATERIALS

THE INSPECTION AND TESTING OF MATERIALS AND FINISHED ARTICLES TO BE INCORPORATED IN THE WORK SHALL BE MADE BY BUREAUS, LABORATORIES, OR AGENCIES APPROVED BY THE ENGINEER OF RECORD. THE CONTRACTOR SHALL SUBMIT SUCH SAMPLES, OR SUCH SPECIAL OR TEST PIECES OF MATERIALS AS THE ENGINEER OF RECORD MAY REQUIRE. THE CONTRACTOR SHALL NOT INCORPORATE ANY MATERIAL OR FINISHED ARTICLE INTO THE WORK UNTIL THE RESULTS OF THE INSPECTIONS OR TESTS ARE KNOWN AND THE CONTRACTOR HAS BEEN NOTIFIED BY THE ENGINEER OF RECORD THAT THE MATERIAL OR FINISHED ARTICLE IS ACCEPTED. ALL MATERIALS MUST BE OF THE SPECIFIED QUALITY AND BE EQUAL TO THE APPROVED SAMPLE IF A SAMPLE HAS BEEN SUBMITTED. CERTIFIED COPIES OF ALL TESTS MADE SHALL BE SUBMITTED TO THE ENGINEER OF RECORD AS WELL AS TO THE CITY'S DESIGNATED SITE INSPECTOR.
THE CITY'S DESIGNATED SITE INSPECTOR MUST RECEIVE COPIES OF ALL TESTING REPORTS AND CERTIFICATES PRIOR TO THE ENGINEER OF RECORD REQUESTING A FINAL PROJECT INSPECTION FROM THE CITY.

B. LABORATORY CONTROL AND CERTIFICATES

1. SPECIFICATIONS . SAMPLING, TESTING, AND LABORATORY METHODS SHALL BE IN ACCORDANCE WITH THE STANDARD SPECIFICATIONS OF THE AASHTO OR ASTM. WHERE AASHTO OR ASTM SPECIFICATIONS ARE USED, THE REFERENCE SHALL BE CONSTRUED TO BE THE MOST RECENT STANDARD SPECIFICATIONS OR TENTATIVE SPECIFICATIONS OF THE AASHTO OR ASTM IN FORCE ON THE DATE OF THE TEST.

2. TEST & CERTIFICATES. THE CONTRACTOR SHALL ENGAGE AN APPROVED TESTING LABORATORY TO PROVIDE THE FOLLOWING TESTS AND CERTIFICATIONS SIGNED BY A REGISTERED ENGINEER OF THE STATE OF FLORIDA. ALL TECHNICIANS PERFORMING THE TESTS SHALL BE STATE CERTIFIED FOR THE TESTING PERFORMED. ADDTIONAL TESTS THAT MAY BE REQUIRED BY EITHER THE ENGINEER OF RECORD OR THE CITY SHALL ALSO BE PROVIDED BY THE CONTRACTOR, AND THE FOLLOWING SHALL NOT BE TAKEN AS A COMPLETE AND EXHAUSTIVE LIST OF THE CONTRACTOR'S TESTING RESPONSIBILITIES.

   A. SOIL ANALYSIS FOR STRUCTURAL FILL MATERIAL PRIOR TO INSTALLATION.
   B. PROCTOR DENSITIES, MOISTURE CONTENT, COMPACTED FIELD DENSITIES, AND ATTERBERG LIMITS.
   C. SOIL CEMENT MIX DESIGNS AND COMPRESSIVE STRENGTH TESTS (FOR SOIL CEMENT ROAD BASE ONLY).
   D. SUPERVISION OF ALL SOIL CEMENT BASE CONSTRUCTION.
   E. ANALYSIS OF RECYCLED CONCRETE BASE MATERIAL PRIOR TO INSTALLATION.
   F. ASPHALT MIX DESIGN, BITUMEN CONTENT, SIEVE ANALYSIS, HUBBARD FIELD STABILITY TESTS, NUCLEAR DENSITY TESTS (BACKSCATTER METHOD), AND ANALYSIS OF CORE SAMPLES.
   G. CONCRETE MIX DESIGNS FOR ALL APPLICATIONS INCLUDING PAVEMENT, CAST-IN-PLACE STRUCTURES, CURBING, GUTTERS, SIDEWALKS, BIKE PATHS, APRONS AND DRIVEWAYS.
   H. COMPRESSIVE TEST CYLINDERS AND SLUMP TESTS FOR ALL APPLICATIONS OF CONCRETE, INCLUDING PAVEMENT, CAST-IN-PLACE STRUCTURES, CURBING, GUTTERS, SIDEWALKS, BIKE PATHS, APRONS, AND DRIVEWAYS.
   I. CHLORINE RESIDUAL AND BACTERIOLOGICAL TESTING OF WATER MAINS.
   J. PRESSURIZED LEAK TESTING OF WATER MAINS, FORCE MAINS, AND RECLAIMED WATER MAINS.

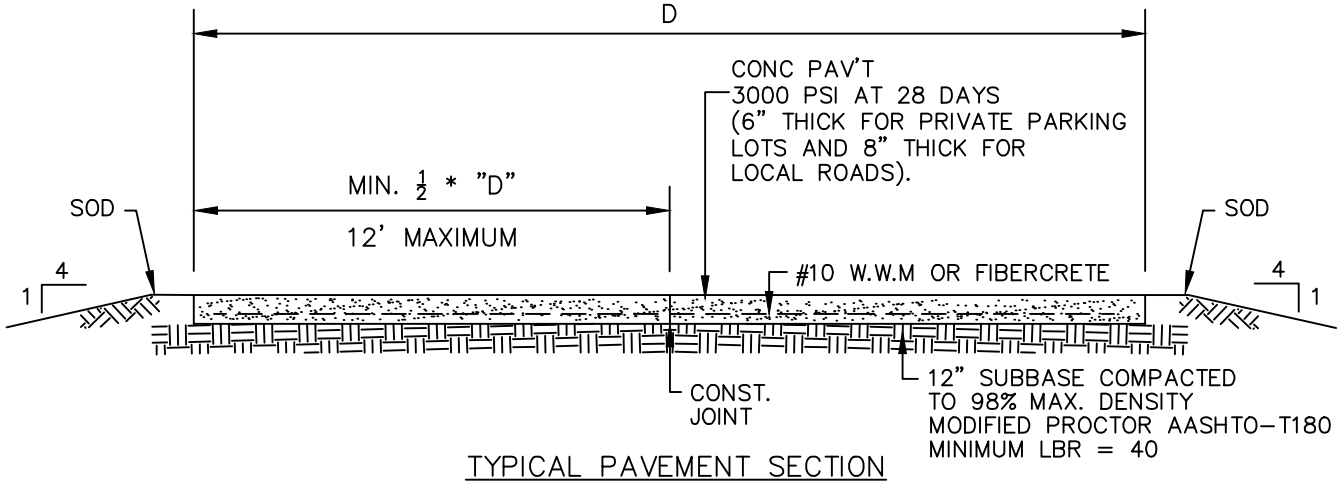

TYPICAL PAVEMENT SECTION

NOTE: FOR ROADWAYS, THE CROSSSLOPE SHALL BE 1/4" PER FOOT. FOR PRIVATE PARKING AREAS THE MINIMUM ALLOWABLE PAVEMENT SLOPE SHALL BE NO LESS THAN 0.50% MEASURED FROM THE RECEIVING INLET, GUTTER, OR FLUME TO ANY PAVEMENT.

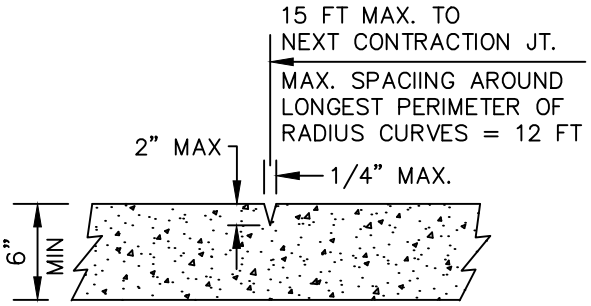

CONTRACTION JOINT

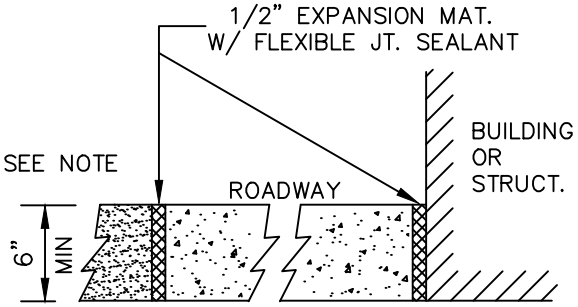

EXPANSION JOINT

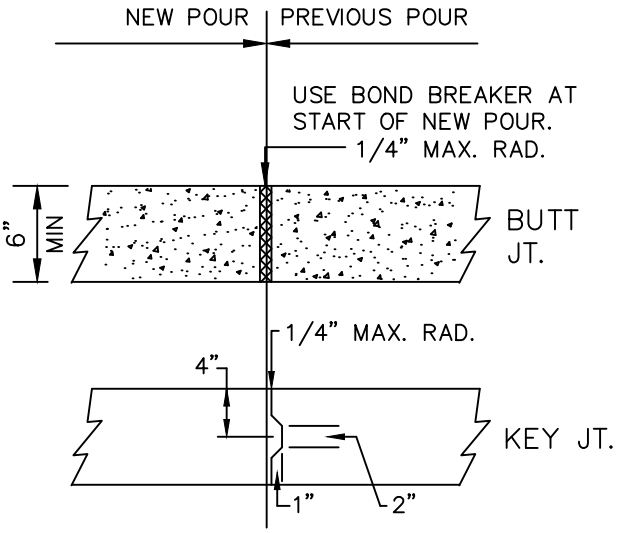

CONSTRUCTION JOINT

NOTES:

1. CONTRACTION JTS. MAY BE HAND FORMED, SAWED OR CONSTRUCTED W/ A 1/4" PREMOLDED FILLER JT. JOINTS MUST BE SAWED BETWEEN 4 AND 18 HOURS AFTER CONCRETE HAS BEEN PLACED.
2. EXPANSION JOINTS TO BE PLACED BETWEEN ROADWAY AND CURB. ALSO AT ANY PERMANENT STRUCTURE ABUTTING OR WITHIN THE PAVED AREA INCLUDING SIDEWALKS.
3. USE OF WOOD IS NOT AN ACCEPTABLE ALTERNATIVE TO FLEXIBLE JOINT SEALANTS.
4. FINAL DETERMINATION OF CONSTRUCTION JOINT SELECTION AND APPLICATION SHALL BE MADE BY THE ENGINEER OF RECORD BASED ON PROJECT REQUIREMENTS AND LOCATION.
5. CONSTRUCTION JOINTS WITHIN THE SLAB AREA SHOULD NOT CONTAIN PREMOLDED EXPANSION JOINT FILLER.
6. CONCRETE PAVEMENT CONSTRUCTION SHALL BE IN ACCORDANCE WITH A.C.I. PUBLICATION ACI 330R-87.

City of EDGEWATER Inc. 1951

STANDARD CONSTRUCTION DETAIL
CONCRETE PAVEMENT DETAILS

FILE NAME:
EW_R19.DWG

DETAIL REF:
R-19

SUBDIVISION TECHNICAL SPECIFICATIONS:
SODDING, SEEDING AND MULCHING

A. SCOPE OF WORK THE WORK IN THIS SECTION CONSISTS OF FURNISHING AND COMPLETELY INSTALLING SOD, OR SEED AND MULCH OVER THE LIMITS CALLED FOR ON THE CONSTRUCTION DRAWINGS. AT A MINIMUM, ALL WORK SHALL MEET THE MINIMUM SPECIFICATIONS OF THE FDOT STANDARD SPECIFICATIONS FOR ROAD AND BRIDGE CONSTRUCTION, LATEST EDITION, AS OUTLINED IN SECTIONS 570 (GRASSING BY SEEDING) AND 575 (SODDING). IN ADDITION, ALL WORK SHALL MEET THE MINIMUM REQUIREMENTS OF THE CITY.

B. MATERIALS GRASS SEED SHALL BE A MIXTURE OF:

PENSACOLA BAHIA (USE 50 % SCARIFIED SEED)	50%
HULLED BERMUDA	25%
BROWN TOP MILLET	25%

IN THE FALL AND WINTER MONTHS, AND WITH THE APPROVAL OF THE CITY, ANNUAL RYE GRASS SHALL BE SUBSTITUTED IN EQUAL AMOUNTS FOR THE BROWN TOP MILLET. SEED SHALL BE PRE-MIXED BY A SEED COMPANY TO THE PERCENTAGES DESCRIBED ABOVE, WITH CERTIFICATION FROM THE SUPPLIER PROVIDED TO THE CITY'S DESIGNATED PROJECT LANDSCAPE INSPECTOR PRIOR TO USE.

MULCH USED SHALL BE STRAW OR HAY CONSISTING OF OATS, RYE, OR WHEAT STRAW, OR OF PANGOLA, PEANUT, COASTAL BERMUDA, OR BAHIA GRASS HAY. MULCH SHALL BE FREE FROM UNDESIRABLE WEED AND OTHER UNDESIRABLE GRASS.

C. METHODS. GRASSING SHALL BE DONE IMMEDIATELY UPON COMPLETION OF THE FINE GRADING OPERATION. HOWEVER, NO SEEDING SHALL BE DONE WHEN THE GROUND IS FROZEN OR UNDULY WET. THE RATE OF SPREAD FOR THE SEED MATERIAL SHALL BE ONE HUNDRED AND THIRTY (130) POUNDS PER ACRE.

APPROXIMATELY ONE INCH (1"), LOOSE THICKNESS, OF MULCH MATERIAL SHALL BE APPLIED UNIFORMLY OVER THE SEEDED AREAS (APPROXIMATELY ONE AND ONE-HALF (1-1/2) BALES PER 1000 SQUARE FEET). THE MULCH MATERIAL SHALL BE CUT INTO THE SOIL WITH A DISC HARROW OR OTHERWISE ANCHORED DOWN. UNDER PROPER CIRCUMSTANCES, CONTRACTOR MAY REQUEST OPTION TO INSTALL HYDRO-SEEDING SUBJECT TO THE APPROVAL OF THE PROJECT LANDSCAPE ARCHITECT AND THE CITY

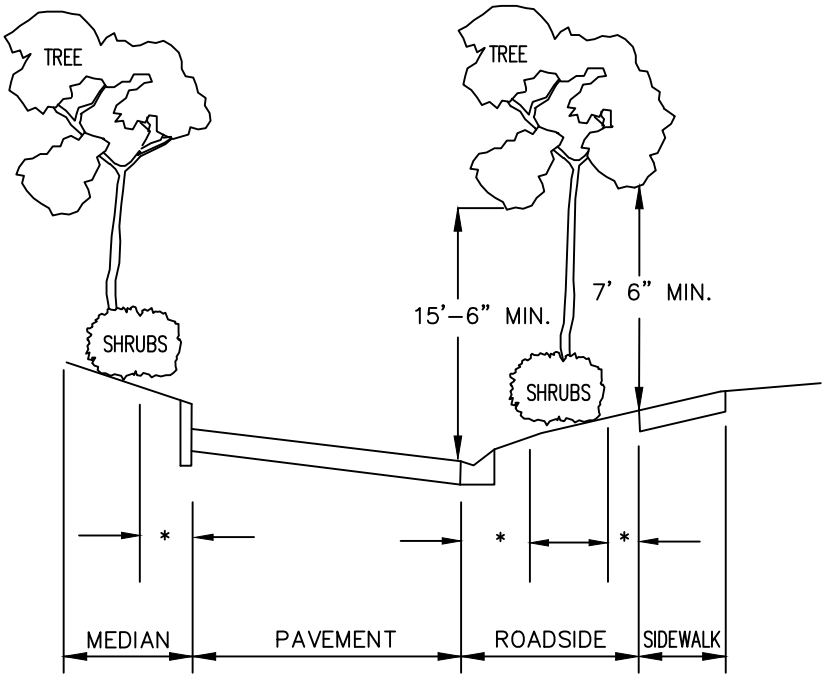

ROADWAY CLEAR ZONES (*)					
	DESIGN SPEED (MPH)				
TYPE FACILITY	25 & BELOW	30	35	40	45+
DISTANCE FROM EDGE OF PAVEMENT	6'	6' LOCAL 10' COLLECTOR 14' ARTERIAL	6' LOCAL 10' COLLECTOR 14' ARTERIAL	10' COLLECTOR 14' ARTERIAL	F.D.O.T. STANDARD
DISTANCE FROM SIDEWALK	1.5	1.5	1.5	1.5	F.D.O.T. STANDARD

* SEE NOTES ON SHEET R-21B *

City of EDGEWATER Inc. 1951

STANDARD CONSTRUCTION DETAIL
ROADWAY AND MISCELLANEOUS LANDSCAPING
DESIGN AND CONSTRUCTION NOTES

FILE NAME:
EW_R21A.DWG

DETAIL REF:
R-21A

ROADWAY AND MISCELLANEOUS LANDSCAPING DESIGN AND CONSTRUCTION NOTES (CONTD.)

NOTES:

1. THE CLEAR ZONE MAY BE REDUCED ON A CASE BY CASE BASIS IF THE MINIMUM OFFSET CANNOT BE REASONABLY OBTAINED OR IF A NON-MOUNTABLE CURBE TYPE IS INSTALLED.

2. TREES IN EXCESS OF 12" CALIPER AT MATURITY AND MULTI-TRUNKED PALMS SHALL BE SET BACK TO TWICE THE MINIMUM CLEAR ZONE (2 X *).

3. WHERE PAVEMENT WIDENING IN ACCORDANCE WITH FDOT STANDARDS IS NOT PROVIDED IN HORIZONTAL CURVES, ADDITIONAL CLEAR ZONE SHALL BE PROVIDED EQUAL TO THE REQUIRED PAVEMENT WIDENING.

4. CLEAR ZONES ON CURBED ROADS SHALL BE MEASURED FROM THE FACE OF CURB OR FROM THE EDGE OF THE THROUGH LANE ON RURAL ROADS. CURBED STREETS ARE FOR HIGH BACK CURBS ONLY.

5. SHRUBS ADJACENT TO SIDEWALKS AND WITHIN INTERSECTION SIGHT TRIANGLES CANNOT EXCEED 24" ABOVE THE LOWEST ADJACENT ROADWAY GRADE. ALL OTHER SHRUBS MUST BE LESS THAN OR EQUAL TO 30 INCHES IN HEIGHT.

6. INSTALLATION OF LANDSCAPING IN PUBLIC RIGHTS-OF-WAY REQUIRES EXECUTION OF A "USE AGREEMENT" BETWEEN THE DEVELOPER AND THE CITY. FOR INSTANCES WHERE THE STREETS AND PRIVATE AND PUBLIC UTILITY EASEMENTS ARE PROVIDED, THE DEVELOPER MAY BE REQUIRED TO OBTAIN A RELEASE FROM THE FRANCHISE UTILITIES IN ORDER TO INSTALL THE LANDSCAPING IMPROVEMENTS.

7. LANDSCAPING PLANS SHALL CLEARLY DEPICT THE DESIGN LOCATION OF PLANTINGS RELATIVE TO THE LOCATION OF UNDERGROUND AND OVERHEAD PUBLIC UTILITIES AND STORMWATER INFRASTRUCTURE IN ORDER TO EVALUATE POTENTIAL CONFLICTS.

8. SHRUBS, UNDERSTORY, TREES AND PALMS SHALL BE ALLOWED IN THE RIGHT-OF-WAY WITH EXISTING AND PROPOSED UTILITIES. SHADE TREES, ESPECIALLY THOSE WITH AGGRESSIVE ROOT SYSTEMS, WILL REQUIRE SPECIFIC CITY APPROVAL.

9. SHADE TREES MUST NOT BE PLANTED UNDER OR DIRECTLY ADJACENT TO OVERHEAD UTILITIES THAT WOULD REQUIRE EXCESSIVE PRUNING TO AVOID THE UTILITY LINES.

10. TREES WITH AGRESSIVE ROOT SYSTEMS SHALL REQUIRE SOME FORM OF ROOT GUIDING SYSTEM TO PREVENT THE UPHEAVAL OF ADJACENT ROADWAY PAVEMENT AND/OR SIDEWALKS.

City of EDGEWATER Inc. 1951	STANDARD CONSTRUCTION DETAIL ROADWAY AND MISCELLANEOUS LANDSCAPING DESIGN AND CONSTRUCTION NOTES	FILE NAME: EW_R21B.DWG DETAIL REF: R-21B

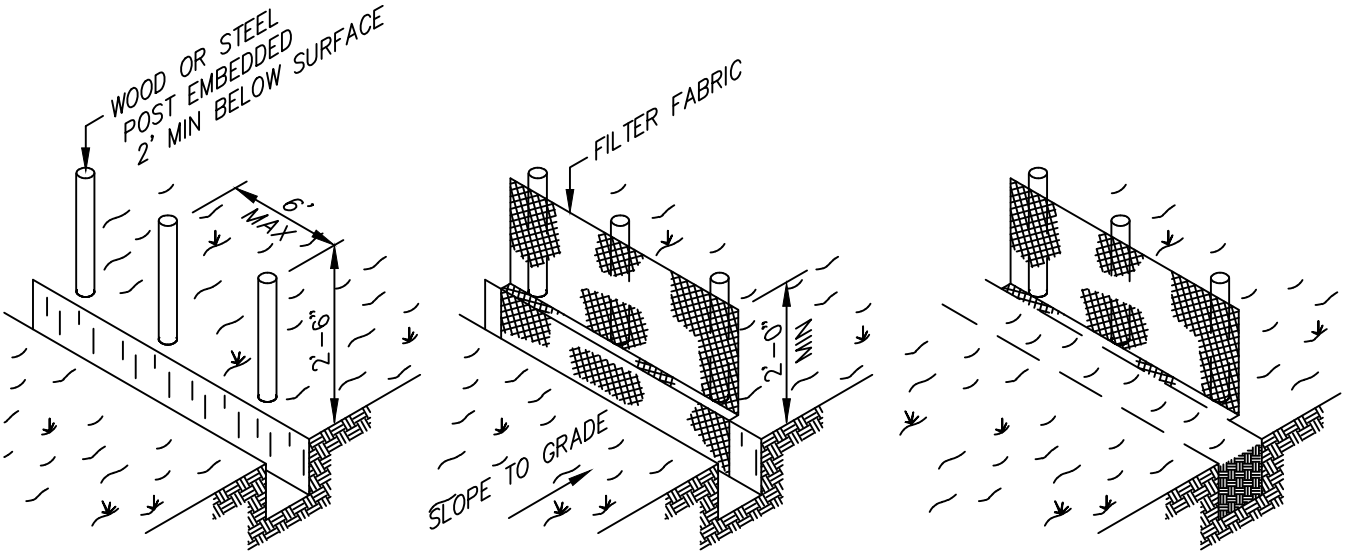

SET POST AND
EXCAVATE A TRENCH

ATTACH FILTER FABRIC TO POST
ALLOWING 1 FT EXTENSION INTO
THE TRENCH AS SHOWN

BACKFILL AND COMPACT
EXCAVATED SOIL

SILT FENCE DETAIL

F.D.O.T. INDEX NO. 102

NOTES:

1. MATERIALS, CONSTRUCTION METHODS AND MAINTENANCE SHALL BE IN ACCORDANCE WITH THE FLORIDA DEPARTMENT OF TRANSPORTATION STANDARD SPECIFICATIONS AND DESIGN STANDARDS CURRENT EDITION.
2. CONTRACTOR SHALL PROVIDE SILT FENCES AND HAY BALES AT ALL STORMWATER DISCHARGE POINTS FOR EROSION CONTROL AND SEDIMENT CONTROL DURING CONST.
3. CONTRACTOR SHALL ROUGH GRADE STORM-WATER SWALES AND RETENTION AREAS PRIOR TO CONSTRUCTION OF SITE IMPROVEMENTS.
4. CONTRACTOR SHALL MEET ALL PERMIT CONDITIONS AS ESTABLISHED BY THE CITY AND ALL OTHER APPLICABLE AGENCIES, INCLUDING BUT NOT LIMITED TO COUNTY, FDOT, AND THE SJRWMD.

City of EDGEWATER Inc. 1951	STANDARD CONSTRUCTION DETAIL SILT FENCE TURBIDITY BARRIER	FILE NAME: EW_R22.DWG DETAIL REF: R-22

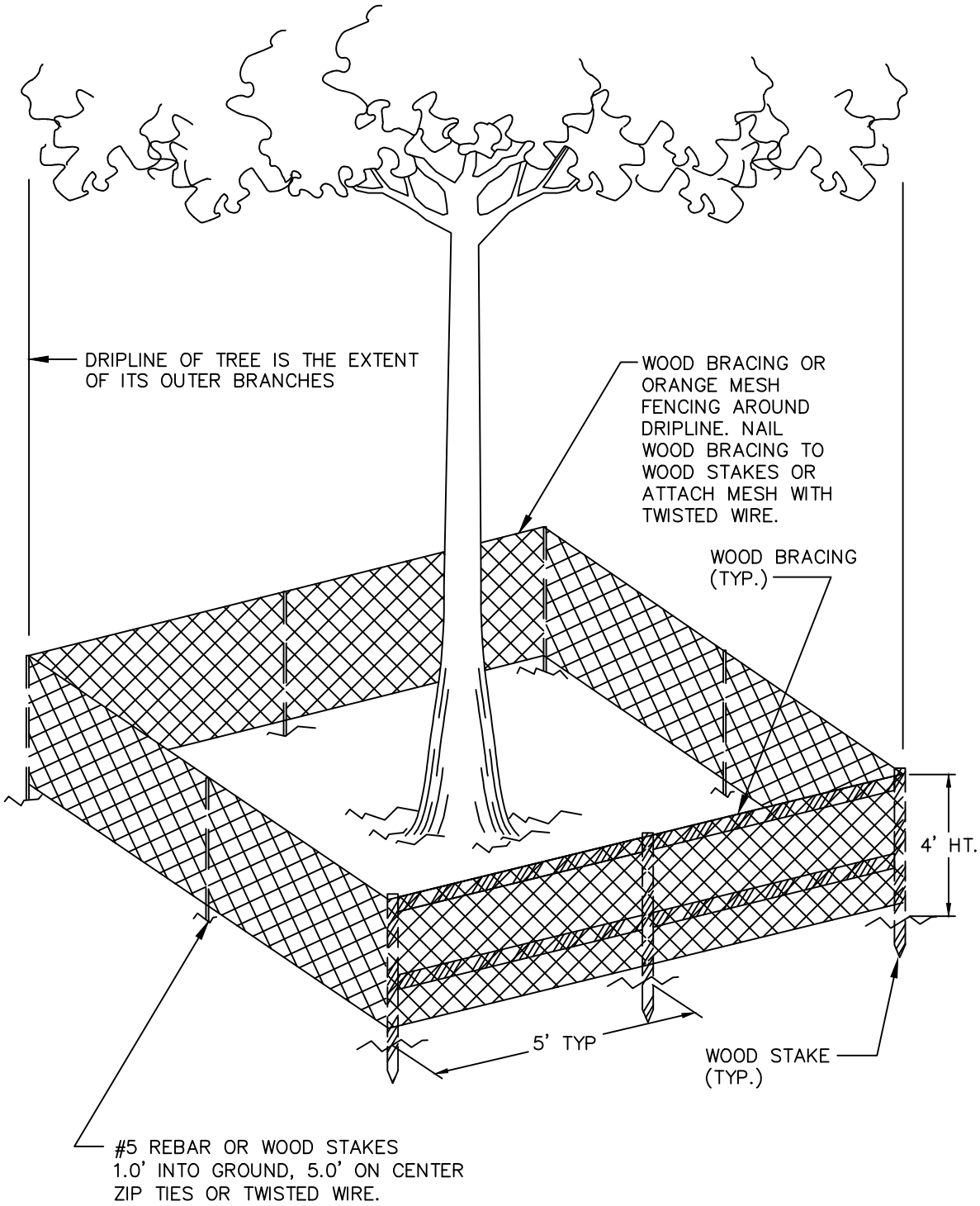

NOTE: BARBED WIRE FENCING IS NOT PERMISSIBLE

City of EDGEWATER Inc. 1951	STANDARD CONSTRUCTION DETAIL TREE PROTECTION BARRICADE	FILE NAME: EW_R23.DWG DETAIL REF: R-23

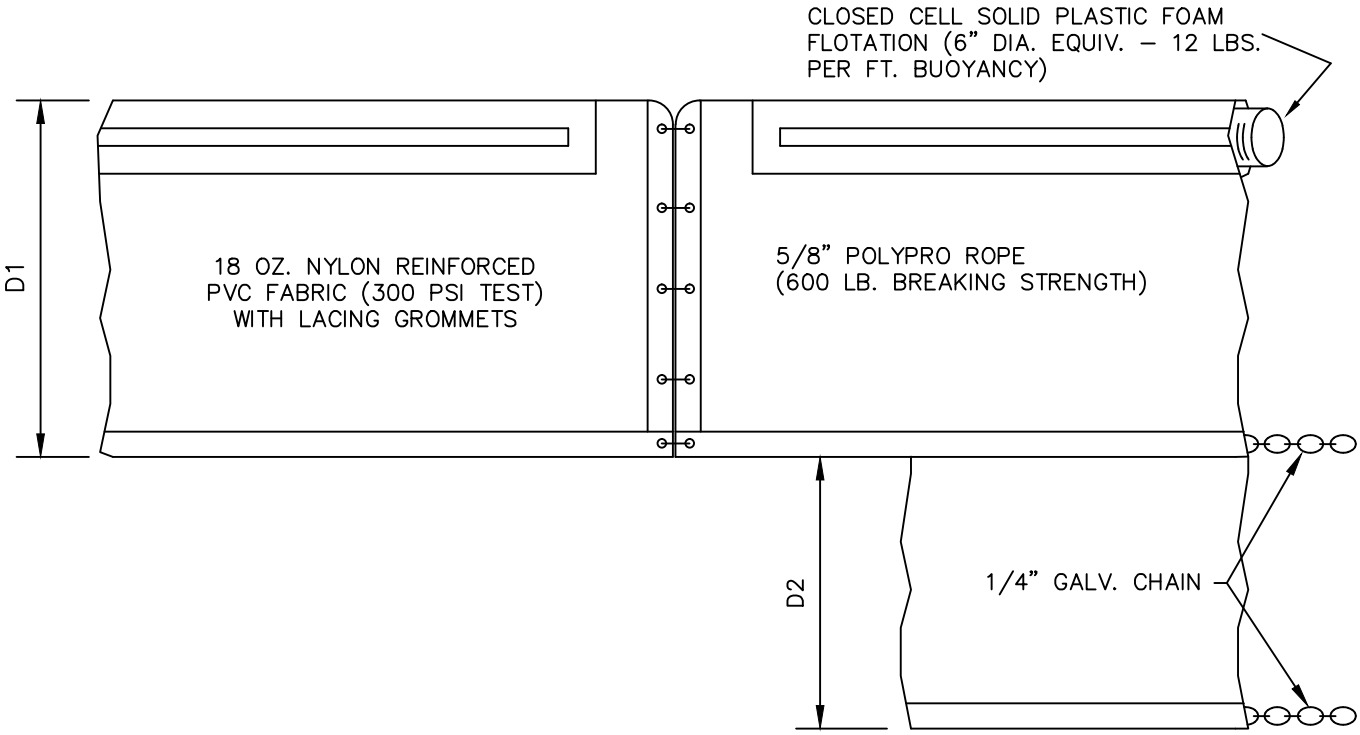

FLOATING TURBIDITY BARRIER

F.D.O.T. INDEX NO. 103

D1 – 5 FT. STD. SINGLE PANEL FOR DEPTHS 5 FT. OR LESS

D2 – 5 FT. STD. ADDITIONAL PANEL FOR DEPTHS GREATER THAN 5 FT.

CURTAIN TO REACH BOTTOM UP TO DEPTHS OF 10 FT.
TWO PANELS TO BE USED FOR DEPTHS GREATER THAN 10 FT.

City of EDGEWATER Inc. 1951	STANDARD CONSTRUCTION DETAIL FLOATING TURBIDITY BARRIER	FILE NAME: EW_R24.DWG DETAIL REF: R–24

CONTRACTOR REQUIREMENTS FOR SITE CLEARING, GRADING, AND EROSION CONTROL DESIGN AND CONSTRUCTION NOTES

THE FOLLOWING MEASURES REPRESENT MINIMUM STANDARDS TO BE ADHERED TO BY THE CONTRACTOR THROUGHOUT THE CONSTRUCTION OF A PROJECT. THE CITY RESERVES THE RIGHT TO REQUIRE ADDITIONAL MEASURES TO BE EMPLOYED WHEN WARRANTED BY EXTREME CONDITIONS AND/OR THE FAILURE OF THE CONTRACTOR TO EMPLOY THE APPROPRIATE EROSION CONTROL BEST MANAGEMENT PRACTICES. FAILURE TO COMPLY WITH THESE PROVISIONS SHALL RESULT IN THE ISSUANCE OF A "STOP WORK ORDER".

1. NO DISTURBANCE OF PROPOSED CONSERVATION EASEMENTS, NATURAL BUFFERS, OR WATER BODIES IS PERMITTED. THE CONTRACTOR SHALL LOCATE THESE AREAS ON SITE AND BARRICADE THEM TO AVOID ANY UNAUTHORIZED CLEARING. BARRICADES AND OTHER PROTECTIVE FENCING ARE TO BE LOCATED AT THE DRIP LINE OF EXISTING NATIVE TREES OR AT THE EDGE OF THE NATIVE UNDER-STORY HABITAT, WHICHEVER IS NEAREST TO THE CONSTRUCTION ACTIVITY.

2. SPECIMEN AND HISTORIC TREES, CONSERVATION EASEMENTS, NATURAL VEGETATION BUFFERS, AND SIMILAR AREAS MUST BE PROTECTED BY BARRICADES OR FENCING PRIOR TO CLEARING. BARRICADES ARE TO BE SET AT THE DRIP LINE OF THE TREES AND MAINTAINED THROUGHOUT THE DURATION OF THE PROJECT. BARBED WIRE IS NOT PERMITTED AS A PROTECTIVE BARRIER.

3. WHERE A CHANGE OF GRADE OCCURS AT THE DRIP LINE OF A SPECIMEN TREE, SILT FENCES WILL BE REQUIRED DURING CONSTRUCTION AND RETAINING WALLS MUST BE INSTALLED PRIOR TO FINAL ACCEPTANCE BY THE CITY.

4. IT SHALL BE THE RESPONSIBILITY OF THE CONTRACTOR TO HAVE ALL PROTECTIVE VEGETATION BARRICADES AND EROSION CONTROL STRUCTURES AND MEASURES IN PLACE PRIOR TO THE COMMENCEMENT OF ANY EARTHWORK, INCLUDING PRELIMINARY GRUBBING. THESE MEASURES INCLUDE, BUT ARE NOT LIMITED TO, TEMPORARY CONSTRUCTION FENCES, HAY BALES, SILT FENCES, AND FLOATING TURBIDITY BARRIERS. FURTHER, IT SHALL BE THE RESPONSIBILITY OF THE CONTRACTOR TO MAINTAIN ALL EROSION CONTROL DEVICES THROUGHOUT THE DURATION OF THE ENTIRE PROJECT. MAINTENANCE SHALL INCLUDE PERIODIC INSPECTION AND REMOVAL OF DEBRIS ABUTTING EROSION CONTROL DEVICES.

5. PRIOR TO THE INSTALLATION OF ANY FILL MATERIALS ON SUBJECT SITE, SILT FENCES SHALL BE INSTALLED (1) ALONG SUBJECT SITE BOUNDARY AND PROPERTY LINES, (2) AT THE EDGE OF CONSERVATION EASEMENTS AND WETLANDS, (3) ADJACENT TO NATURAL LANDSCAPE BUFFERS, (4) AROUND THE PERIMETER OF EXISTING STORM WATER TREATMENT FACILITIES, AND (5) AT ANY ADDITIONAL AREAS THAT THE CITY DEEMS NECESSARY TO BE PROTECTED FROM POTENTIAL EROSION IMPACTS DURING CONSTRUCTION. THESE CONDITIONS SHALL APPLY IN ALL INSTANCES WHERE FILL MATERIAL IS BEING INSTALLED WITHIN 25 FEET OF ANY OF THE AFOREMENTIONED LOCATIONS. WHILE THESE ITEMS REPRESENT THE MINIMUM REQUIREMENTS, THE CITY RESERVES THE RIGHT TO IMPOSE ADDITIONAL PROTECTIVE MEASURES, AS DETERMINED DURING ACTUAL SITE VISITS CONDUCTED AS PART OF THE STANDARD REVIEW OF THE SITE-SPECIFIC CLEARING PERMIT APPLICATION AND THROUGHOUT PROJECT CONSTRUCTION.

6. WHERE FILL MATERIAL IS INTENDED TO BE INSTALLED ADJACENT TO EXISTING VEGETATION WHICH IS INTENDED TO REMAIN NATURAL, THE CONTRACTOR MAY INSTALL SILT FENCING AS A TREE PROTECTION MEASURE, IN LIEU OF INSTALLING EITHER WOOD BRACING OR ORANGE MESH FENCING. THIS PRACTICE IS ENCOURAGED BY THE CITY. IF THE SILT FENCE FAILS TO PROVIDE ADEQUATE PROTECTION FROM IMPACT DUE TO CONSTRUCTION, THEN ADDITIONAL CONSTRUCTION FENCING OR WOOD BRACING SHALL BE REQUIRED.

7. AT A MINIMUM, THE CONTRACTOR SHALL SEED AND MULCH ALL DISTURBED AREAS. SUFFICIENT GRASS COVERAGE IS TO BE ESTABLISHED WITHIN THIRTY DAYS. - DISTURBED AREAS IN CITY RIGHT-OF-WAYS OR CITY PROPERTY SHALL BE SODDED.

8. IT SHALL BE THE RESPONSIBILITY OF THE CONTRACTOR THROUGH SCHEDULING, TO MINIMIZE THE DISTURBANCE OF SITE AREAS THAT HAVE BEEN BROUGHT TO THEIR PROPOSED FINAL GRADE. WITHIN TWENTY DAYS OF BRINGING A SUBJECT AREA TO ITS FINAL GRADE, THE CONTRACTOR SHALL INSTALL SEED AND MULCH OR SOD, AS REQUIRED.

City of EDGEWATER Inc. 1951	STANDARD CONSTRUCTION DETAIL CONTRACTOR REQUIREMENTS FOR SITE CLEARING, GRADING, AND EROSION CONTROL DESIGN AND CONSTRUCTION NOTES	FILE NAME: EW_R25.DWG DETAIL REF: R-25

CONTRACTOR REQUIREMENTS FOR SITE CLEARING, GRADING, AND EROSION CONTROL DESIGN AND CONSTRUCTION NOTES (CONTD.)

9. FOR INDIVIDUAL CONSTRUCTION PROJECTS INVOLVING MULTIPLE PHASES, UPON COMPLETION OF EACH PHASE OF THE PROJECT, SEEDING AND MULCHING AND OR/ SODDING IS TO BE PERFORMED PRIOR TO COMMENCING THE NEXT PHASE OF CONSTRUCTION.

10. ONCE AN AREA IS SEEDED OR SODDED, IT MUST BE MAINTAINED BY THE CONTRACTOR TO ALLOW THE GRASS TO BECOME ESTABLISHED.

11. ANY BURNING OF CLEARED MATERIALS MUST BE INSPECTED AND PERMITTED ON A DAILY BASIS. CONTACT THE CITY FIRE MARSHALL AT 424–2412 PRIOR TO EACH DAY OF DESIRED BURNING.

12. ABSOLUTELY NO BURYING OF CLEARED MATERIALS IS PERMITTED.

13. THE REMOVAL OF ALL VEGETATION AND TOPSOIL ON THE FUTURE ROADWAY, PARKING AND BUILDING LOT AREAS IS REQUIRED TO BE COMPLETED PRIOR TO THE PLACEMENT OF FILL ON THOSE AREAS. THE TOPSOIL MAY BE TEMPORARILY STOCKPILED AND USED AS TOPSOIL OVER OVER PROPOSED GREEN AREAS SUCH AS PLANT BEDS, SODDED AREAS, AND WHERE TREES ARE TO BE INSTALLED OR RELOCATED.

14. A SIGNED, DATED, AND SEALED LETTER FROM A SOILS ENGINEER OR THE ENGINEER OF RECORD CERTIFYING THAT THE AREAS TO BE FILLED HAVE BEEN STRIPPED OF ORGANIC MATERIALS, MUST BE SUBMITTED TO THE CITY PRIOR TO FILLING.

15. FILL MATERIAL IS TO BE PLACED IN ONE FOOT LIFTS AND COMPACTED TO THE APPROPRIATE DENSITY (98% FOR PAVED AREAS AND 95% FOR BUILDING PADS AND ALL OTHER AREAS AS PER AASHTO T–180).

16. DURING SUBDIVISION DEVELOPMENT WHEN FUTURE BUILDING LOTS ARE FILLED AS PART OF THE OVERALL SUBDIVISION IMPROVEMENTS, COMPACTION TEST REPORTS MUST BE PERFORMED ON THE BUILDING LOTS AT 300 FOOT INTERVALS. THESE TESTS ARE TO BE PERFORMED IN ONE–FOOT VERTICAL INCREMENTS. THE RESULTS OF THESE TESTS ARE TO BE SUBMITTED TO THE CITY UPON COMPLETION OF THE TESTS.

17. IF ANY MUCK MATERIAL IS DISCOVERED, IT SHALL BE REQUIRED TO BE REMOVED AND REPLACED WITH A SUITABLE MATERIAL THAT IS PROPERLY BACKFILLED, COMPACTED AND TESTED USING AASHTO T–180 MODIFIED PROCTOR METHOD.

18. STOCKPILING IS NOT GENERALLY PERMITTED BY THE CITY. WHEN ALLOWED, STOCKPILES SHALL NOT EXCEED SIX FEET IN HEIGHT MEASURED FROM THE ORIGINAL GRADE. AT A MINIMUM, STOCK PILES THAT WILL REMAIN IN PLACE IN EXCESS OF TWENTY DAYS SHOULD BE SEEDED AND MULCHED IMMEDIATELY UPON PLACEMENT OF THE FINAL LIFT.

19. SOILS ARE TO BE STABILIZED BY WATER OR OTHER MEANS DURING CONSTRUCTION. THIS IS INTENDED TO REDUCE SOIL EROSION AND THE IMPACT TO NEIGHBORING COMMUNITIES. ADEQUATE WATERING METHODS SHOULD BE EMPLOYED TO ALLOW DAILY COVERAGE OF THE ENTIRE LIMITS OF ALL AREAS THAT DO NOT HAVE AN ESTABLISHED VEGETATIVE COVER. METHODS TO BE EMPLOYED INCLUDE, BUT ARE NOT LIMITED TO, WATER TRUCKS, PERMANENT IRRIGATION SYSTEMS, TEMPORARY SPRINKLER SYSTEMS OPERATED BY PUMPING UNITS CONNECTED TO WET RETENTION PONDS, WATER CANNONS, TEMPORARY IRRIGATION SYSTEMS MOUNTED ATOP STOCKPILE AREAS, AND OTHER METHODS AS DEEMED NECESSARY BY THE CITY.

20. ALL FILL MATERIALS LOCATED BENEATH STRUCTURES AND PAVEMENT SHALL CONSIST OF CLEAN GRANULAR SAND FREE FROM ORGANICS AND SIMILAR MATERIAL THAT COULD DECOMPOSE.

21. ALL FILL TO BE PLACED IN LANDSCAPED AREAS SHALL HAVE A Ph RANGE BETWEEN 5.5 AND 7.5, BE ORGANIC IN NATURE, FREE OF ROCKS AND DEBRIS, OR MATCH NATIVE EXISTING SOILS.

City of EDGEWATER Inc. 1951	STANDARD CONSTRUCTION DETAIL CONTRACTOR REQUIREMENTS FOR SITE CLEARING, GRADING, AND EROSION CONTROL DESIGN AND CONSTRUCTION NOTES	FILE NAME: EW_R26.DWG DETAIL REF: R–26